BRAKES—50 SERIES

Model Application	S35	S46	S56	S66	S75
Brake Actuation	Vacuum hydraulic, dual circuit				Air-hydraulic dual line
Front Brakes Size Type Drum material	282·4×76·2 mm (11·12×3·0 in) Two leading shoe Cast iron	330·2×76·2 mm (13×3·0 in) Two leading shoe Cast iron	330·2×76·2 mm (13×3·0 in) Two leading shoe Cast iron	330·2×76·2 mm (13×3·0 in) Two leading shoe Cast iron	330 x 102 mm (13 x 4 in) Lockheed H20 AA M/100/0005 grey cast iron
Rear Brakes Size Type Drum material	307·8×76·2 mm (12·12×3·0 in) Duo servo Cast iron	307·8×76·2 mm (12·12×3·0 in) Duo servo Cast iron	307·8×76·2 mm (12·12×3·0 in) Duo servo Cast iron	307·8×101·6 mm (12·12×4·0 in) Duo servo Cast iron	330 x 140 mm (13 x 5.5 in) Lockheed HDD AA M/100/0005 grey cast iron
Lining, Front Type Attachment Thickness Lining area per wheel	2629F Ferodo 5·8 mm (0·23 in) 401 cm² (62·15 in²)	S4 Mintex 9·7 mm (0·38 in) 493 cm² (76·4 in²)	S4 Mintex 9·7 mm (0·38 in) 493 cm² (76·4 in²)	S4 Mintex 9·7 mm (0·38 in) 493 cm² (76·4 in²)	S4 Mintex 8 mm (0.318 in) 644 cm² (99.8 in²)
Lining, Rear Type Attachment Thickness Lining area per wheel	S2/S3 Mintex 7·6 mm (0·30 in) 483 cm² (74·9 in²)	S2/S3 Mintex 7·6 mm (0·30 in) 483 cm² (74·9 in²)	S2/S3 Mintex 7·6 mm (0·30 in) 483 cm² (74·9 in²)	S2/S3 Mintex 7·6 mm (0·30 in) 644 cm² (99·8 in²)	S3 primary, S2 secondary Mintex 8.5 mm (0,338 in) primary – 10.0 mm (0.396 in) secondary 946 cm² (146.6 in²)
Front Wheel Cylinders Type No per wheel Bore diameter	 Two 31·8 mm (1·25 in)	 Two 31·8 mm (1·25 in)	 Two 31·8 mm (1·25 in)	 Two 31·8 mm (1·25 in)	 Two 31.8 mm (1.25 in)
Rear Wheel Cylinders Type No per wheel Bore diameter	 One 22·2 mm (0·875 in)	 One 25·4 mm (1·0 in)	 One 25·4 mm (1·0 in)	 One 25·4 mm (1·0)	 One 28.6 mm (1.125 in)
Master Cylinder Type Bore diameter Stroke	 Girling 27 mm (1·062 in) 34·5 mm (1·358 in)	 Girling 27 mm (1·062 in) 34·5 mm (1·358 in)	 Girling 27 mm (1·062 in) 34·5 mm (1·358 in)	 Girling 27 mm (1·062 in) 34·5 mm (1·358 in)	 Girling 44.45 mm (1.75 in) 50.0 mm (1.97 in)
Park Brake Location	Mechanical Rear wheels	Mechanical Rear wheels	Mechanical Rear wheels	Mechanical Rear wheels	Spring type Rear wheels
Power Assistance	Vacuum	Vacuum	Vacuum	Vacuum	Compressed Air
Power Supply (1)	Exhauster (diesel)	Exhauster (diesel)	Exhauster (diesel)	Exhauster (diesel)	Engine Driven Air Compressor
Total Brake Lining Area	1768 cm² (274·1 in²)	1952 cm² (302·6 in²)	1952 cm² (302·6 in²)	2274 cm² (352·5 in²)	3180 cm² (493 in²)

(1) Inlet depression on petrol engines.

WHEEL AND RIM SPECIFICATIONS—50 SERIES

Rim Type	Type	No of pieces	Wheel fixing	Stud PCD	Offest	Weight
5·50F×16	Semi drop centre	Two	Six stud	205 mm (8·07 in)	31·8 mm (1·25 in) 119·4 mm (4·7 in)	16·3 kg (35·9 lb)
4·50E×16	Semi drop centre	Two	Six stud	205 mm (8·07 in)	103 mm (4·05 in)	15·4 kg (34·0 lb)
5·25×17·5	Drop centre	One	Six stud	205 mm (8·07 in)	32 mm (1·26 in) 117 mm (4·61 in) 117 mm (4·61 in)	18·14 kg (40 lb) 19·05 kg (42 lb) 18 48 kg (40·7 lb)
6.00G x 16	Semi drop centre	Two	Six stud	205 mm (8.07 in)	121.9 mm (4.8 in)	18.3 kg (40.3 lb)

TYRE SPECIFICATIONS—50 SERIES

Size and rating	Manufacturer	Tread type	Static loaded radius	Plated maximum load	Maximum inflation pressure	Weight of tyre, tube and flap (approx)
6.50R 16 (10 PR)	Goodyear Dunlop Michelin Pirelli Firestone	G800 SP111 XCA SN55 LT 2000	346 mm (13·62 in)	Single 2040 kg (4497 lb) Dual 3870 kg (8532 lb)	5·3 bar	17·74 kg (39·10 lb)
7·00R 16 (12 PR)	Goodyear Dunlop Michelin Pirelli Firestone	G800 SP111 XZZ SN 55 LT 2000	364 mm (14·33 in)	Single 2650 kg (5842 lb) Dual 5000 kg (11023 lb)	6·0 bar	23·50 kg (51·80 lb)
8R 17·5C	Goodyear Dunlop Michelin Uniroyal Firestone Pirelli Continental	RT 147 GB 75B XCA RI LT 2000 LT 75 R 52	367 mm (14·44 in)	Single 2300 kg (5070 lb) Dual 4480 kg (9876 lb)	5·25 bar	19·22 kg (42·37 lb) (tubeless)
8R 17·5	Goodyear Uniroyal Pirelli	G18 SN55	367 mm (14·44 in)	Single 2570 kg (5665 lb) Dual 5000 kg (11023 lb)	6·0 bar	23·00 kg (50·70 lb) (tubeless)

Size and rating	Manufacturer	Tread type	Static loaded radius	Plated maximum load in U.K.	Maximum inflation pressure	Weight of tyre, tube and flap (approx)
Tubeless 8.5R 17.5	Goodyear Dunlop Firestone Uniroyal Continental	G18 SP111 LT 2000 RI RS 415	374 mm (14.72 in)	Single 2900 kg (6393 lb) Dual 5600 kg (12345 lb)	6.25 bar	23.00 kg (50.70 lb) (tubeless)
7.50R 16 12 PR Tubed				Single 2900 kg (6393 lb) Dual 5600 kg (12345 lb)	6.3 bar	

Model		S35, S46	S56, S66	S35, S46, S56, S66	S35, S46, S56, S66
Wheelbases		3226 mm (127 in)	3226 mm (127 in)	3658 mm (144 in)	4039 mm (159 in)
Type		Channel section siderails with bolted and riveted crossmembers			
Material		BS 1449 Pt 1 HS 43/35P	BS 1449 Pt 1 HS 43/28P		
Stock thickness		5·0 mm (0·196 in)	5·5 mm (0·216 in)		
Maximum depth		154·5 mm (6·08 in)	190.4 mm (7.50 in)		
Maximum flange width		57.1 mm (2.25 in)	63.5 mm (2.50 in)		
Section modulus		55093 mm³	86622 mm³		
Width of frame	At rear	762·5 mm (30·0 in)	763·5 mm (30·059 in)		
	At front	762·5 mm (30·0 in)	763·5 mm (30·059 in)		
	Over engine	762·5 mm (30·0 in)	763·5 mm (30·059 in)		
Total length		4826·8 mm (190 in)		5589·3 mm (220 in)	6320 mm (248·8 in)
Rear axle to end of frame		1016 mm (40·0 in)		1346·2 mm (53 in)	1696·7 mm (66·8 in)
No of X-members		6		6	7

Model		S75		
Wheelbases		3225.8 mm	3657.6 mm	4038.6 mm
Type		Channel section siderails with bolted and riveted crossmembers		
Material		M/030/1000 B.S.C. Hypress 23		
Stock thickness		5.5 mm (0.216 in)		
Maximum depth		190.5 mm (7.50 in)		
Maximum flange width		63.5 mm (2.5 in)		
Section modulus		86622 mm³		
Width of frame	At rear	763.5 mm (30.059 in)		
	At front	763.5 mm (30.059 in)		
	Over engine	763.5 mm (30.059 in)		
Total length		4826.8 mm (190 in)	5589.3 mm (220 in)	6320 mm (248.8 in)
Rear axle to end of frame		1016 mm (40 in)	1346.2 mm (53 in)	1696.7 mm (66.8 in)
No of X-members		6	6	7

FRONT SPRING SPECIFICATIONS—50 SERIES

Model	S35, S46	S56, S66	S75
Designed Spring Capacity	8044 N (1810 lbf)	9221 N (2075 lbf)	10850 N (2438 lbf)
Material	M/062/0002 or SAE 5160	M/062/0002 or SAE 5160	BS 970 250 A61
Type	Multileaf	Multileaf	Multileaf
Rate	102 N/mm (595 lbf/in)	125 N/mm (716 lbf/in)	159.5 N/mm (910.5 lbf)
Length and Width	1200×65 mm (47·24×2·56 in)	1200×65 mm (47·24×2·56 in)	1200 x 65 mm (47.24 x 2.56 in)
Number of Leaves	Four	Five	Six
Deflection at design load	78·4 mm (3·09 in)	73·41 mm (2·89 in)	68.0 mm (2.68 in)
Weight per Spring (approx)	14·7 kg (39·0 lb)	21·5 kg (47·39 lb)	27.6 kg (60.8 lb)

REAR SPRING SPECIFICATIONS (DUAL RATE)—50 SERIES

Model	S35	S46	S56	S66	S75
Designed Capacity	9418 N (2119 lbf)	13832 N (3112 lbf)	17560 N (3950 lbf)	21288 N (4790 lbf)	24829 N (5580 lbf)
Material	M/062/0002 or SAE 5160	M/062/0002 or SAE 5160	M/062/0002 or SAE 5160	M/062/0002 or SAE 5160	Main BS 970 250 A61 Aux SAE 5160 H
Type	Multileaf	Multileaf	Multileaf	Multileaf	Multileaf dual rate
Rate (main)	110 N/mm (626 lbf/in)	158 N/mm (902 lbf/in)	187 N/mm (1032 lbf/in)	278 N/mm (1534 lbf/in)	500.3 N/mm (2855.8 lb/in)
Length and Width	1400×65 mm (55·12×2·56 in)	1400×65 mm (55·12×2·56 in)	1400×65 mm (55·12×2·56 in)	1400×65 mm (55·12×2·56 in)	1400 x 65 mm (55.118 x 2.56 in)
Number of Leaves	Six	Seven	Eight	Nine	Main 6, Aux 3
Thickness (incl packing)	78 mm (3·07 in)	95 mm (3·74 in)	108·5 mm (4·27 in)	126 mm (4·96 in)	Main 13mm (0.51 in), Aux 18mm (0.71 in) each
Deflection at design load	73·5 mm (2·89 in)	78·5 mm (3·09 in)	78·5 mm (3·09 in)	70·0 mm (2·76 in)	Main 75.2 mm (2.96 in) Aux 49.63 mm (1.95 in)
Weight per Spring (approx)	44·6 kg (98·3 lb)	51·6 kg (113·75 lb)	53·1 kg (117·06 lb)	62·9 kg (138·66 lb)	73.27 kg (161.5 lb)(Combined)

DRIVELINE AVAILABILITY AND G.T.W. CHART

Model	Engine	Gearbox		Rear Axle		G.T.W.(Kg)
		Description	Code	Ratio	Code	
S 35	4.236 (U1/2)	ZF S 5-24/3	FX 1	3.538	AC 2	5000
				3.909	AD 4	5000
				4.273	AE 3	5000
				4.875	AH 4	5000
	6.225 (M 2)	Turner T5.250 D/D	FM 6	3.909	AD 4	5000
				4.273	AE 3	5000
				4.875	AH 4	5000
		Chrysler Auto	FA 1	4.273	AE 3	5000
				4.875	AH 4	5000
	T4.38 (U 3)	Turner T5.250 O/D	FM 4	3.538	AC 2	5000
				3.909	AD 4	5000
				4.273	AE 3	5000
		Chrysler Auto	FA 1	3.909	AD 4	4600
				4.273	AE 3	5000
S 46	4.236 (U1/2)	ZF S 5-24/3	FX 1	3.538	AC 2	7100
				3.909	AD 4	7100
				4.273	AE 3	7100
				4.875	AH 4	7100
	6.225 (M 2)	Turner T5.250 D/D	FM 6	3.909	AD 4	7000
				4.273	AE 3	7100
				4.875	AH 4	7100
		Chrysler Auto	FA 1	4.273	AE 3	5000
				4.875	AH 4	6000
	T4.38 (U 3)	Turner T5.250 O/D	FM 4	3.538	AC 2	7100
				3.909	AD 4	7100
				4.273	AE 3	7100
		Chrysler Auto	FA 1	3.909	AD 4	4600
				4.273	AE 3	5600

DRIVELINE AVAILABILITY AND G.T.W. CHART

Model	Engine	Gearbox		Rear Axle		G.T.W.(Kg)
		Description	Code	Ratio	Code	
S 56	4.236 (U1/2)	ZF S 5-24/3	FX 1	3.909 4.273 4.875 5.430	AD 4 AE 3 AH 4 AK 7	7500 7500 8100 8100
	6.225 (M 2)	Turner T5.250 D/D	FM 6	4.273 4.875 5.430	AE 3 AH 4 AK 7	7500 8100 8100
		Chrysler Auto	FA 1	4.875 5.430	AH 4 AK 7	6000 6600
	T4.38 (U 3)	Turner T5.250 O/D	FM 4	3.538 3.909 4.273 4.875 5.430	AC 2 AD 4 AE 3 AH 4 AK 7	7350 8050 8100 8100 8100
		Chrysler Auto	FA 1	4.273 4.875	AE 3 AH 4	5600 6600
S 66	4.236 (U1/2)	ZF S 5-24/3	FX 1	3.909 4.273 4.875 5.430	AD 4 AE 3 AH 4 AK 7	7500 8650 9100 9100
	6.225 (M 2)	Turner T5.250 D/D	FM 6	4.273 4.875 5.430	AE 3 AH 4 AK 7	7500 8750 9100
		Chrysler Auto	FA 1	5.430 6.000	AK 7 AN 1	6600 6600
	T4.38 (U 3)	Turner T5.250 O/D	FM 4	3.909 4.273 4.875 5.430	AD 4 AE 3 AH 4 AK 7	8050 8900 9100 9100
		Chrysler Auto	FA 1	4.875 5.430	AH 4 AK 7	6600 6600
S 75	4.236 (U1/2)	ZF S 5-24/3	FX 1	4.273 4.875 5.430	AE 3 AH 4 AK 7	8500 9600 9600
	T4.38 (U 3)	Turner T5.250 O/D	FM 4	4.273 4.875 5.430	AE 3 AH 4 AK 7	8900 10000 10000

MODEL DODGE S 35 Calculated Performance Data (Chassis Cab)

Plated GVW	Rear axle type	Rear axle ratio	Tyre equipment	Maximum gradient climbable as %		Maximum geared road speeds										Theoretical Maximum speed on level	
						1st gear		2nd gear		3rd gear		4th gear		5th gear			
				1st gear	Top gear	kph	mph	kph	mph	kph	mph	kph	mph	kph	mph	kph	mph
TYPE 2 LITRE PETROL ENGINE (L3) & FOUR SPEED GEARBOX (WIDE RATIO—FN2)																	
3500 kg	Single speed (AX1)	5·57	7·00R16	35·8	4·0	21·7	13·5	40·7	25·3	72·4	45·0	123·3	76·6	—	—	106·5	66·2
TYPE 2 LITRE PETROL ENGINE (L3) & FIVE SPEED GEARBOX (WIDE RATIO—FM2)																	
3500 kg	Single speed (AX1)	5·57	7·00R16	42·4	4·0	18·2	11·7	34·1	21·2	59·2	36·8	89·2	55·4	123·3	76·6	106·5	66·2
TYPE 4·236 DIESEL ENGINE (U1) & FOUR SPEED GEARBOX (CLOSE RATIO—FN3)																	
3500 kg	Single speed (AX6)	3·538	7·00R16	26·1	4·2	26·2	16·3	45·5	28·3	75·5	46·9	108·6	67·5	—	—	103·3	64·2
		4·273		32·3	5·9	21·7	13·5	37·7	23·4	62·4	38·8	90·0	55·9	—	—	90·0	55·9
TYPE 4·236 DIESEL ENGINE (U1) & FIVE SPEED GEARBOX (CLOSE RATIO—FM3)																	
3500 kg	Single speed (AX6)	3·538	7·00R16	28·8	4·2	24·0	14·9	40·1	24·9	61·0	37·9	87·2	54·2	108·6	67·5	103·3	64·2
		4·273		35·7	5·9	19·8	12·3	33·3	20·7	50·4	31·3	72·1	44·8	90·0	55·9	90·0	55·9

MODEL DODGE S 46 Calculated Performance Data (Chassis Cab)

Plated GVW	Rear axle type	Rear axle ratio	Tyre equipment	Maximum gradient climbable as %		Maximum geared road speeds										Theoretical Maximum speed on level	
						1st gear		2nd gear		3rd gear		4th gear		5th gear			
				1st gear	Top gear	kph	mph	kph	mph	kph	mph	kph	mph	kph	mph	kph	mph
TYPE 2 LITRE PETROL ENGINE (L3) & FOUR SPEED GEARBOX (WIDE RATIO—FN2)																	
4600 kg	Single speed (AX6)	5·43	6·50R16	27·0	3·0	21·1	13·1	39·6	24·6	70·5	43·8	119·9	74·5	—	—	103·3	64·2
TYPE 2 LITRE PETROL ENGINE (L3) & FIVE SPEED GEARBOX (WIDE RATIO—FM2)																	
4600 kg	Single speed (AX6)	5·43	6·50R16	31·8	3·0	18·3	11·4	33·2	20·6	57·6	35·8	86·9	54·0	119·9	74·5	103·3	64·2
TYPE 4·236 DIESEL ENGINE (U1) & FOUR SPEED GEARBOX (WIDE RATIO—FN2)																	
4600 kg	Single speed (AX6)	3·538	6·50R16	29·0	3·3	18·2	11·3	34·0	21·1	60·5	37·6	103·2	64·1	—	—	100·1	62·2
		4·273		36·0	4·6	15·1	9·4	28·2	17·5	50·1	31·1	85·3	53·0	—	—	85·3	53·0
TYPE 4·236 DIESEL ENGINE (U1) & FIVE SPEED GEARBOX (WIDE RATIO—FM2)																	
4600 kg	Single speed (AX6)	3·538	6·50R16	34·1	3·3	15·8	9·8	28·5	17·7	49·6	30·8	74·7	46·4	103·2	64·1	100·1	62·2
		4·273		42·6	4·6	13·0	8·1	23·7	14·7	41·0	25·5	61·8	38·4	85·3	53·0	85·3	53·0

MODEL DODGE S 35 Calculated Performance Data (Chassis Cab)

Plated GVW	Rear axle type	Rear axle ratio	Tyre equipment	Maximum gradient climbable as %		Maximum geared road speeds										Theoretical Maximum speed on level	
						1st gear		2nd gear		3rd gear		4th gear		5th gear			
				1st gear	Top gear	kph	mph	kph	mph	kph	mph	kph	mph	kph	mph	kph	mph
TYPE 2 LITRE PETROL ENGINE (L3) & FOUR SPEED GEARBOX (WIDE RATIO—FN2)																	
3500 kg	Single speed (AX1)	5·57	7·00R16	35·8	4·0	21·7	13·5	40·7	25·3	72·4	45·0	123·3	76·6	—	—	106·5	66·2
TYPE 2 LITRE PETROL ENGINE (L3) & FIVE SPEED GEARBOX (WIDE RATIO—FM2)																	
3500 kg	Single speed (AX1)	5·57	7·00R16	42·4	4·0	18·2	11·7	34·1	21·2	59·2	36·8	89·2	55·4	123·3	76·6	106·5	66·2
TYPE 4·236 DIESEL ENGINE (U1) & FOUR SPEED GEARBOX (CLOSE RATIO—FN3)																	
3500 kg	Single speed (AX6)	3·538	7·00R16	26·1	4·2	26·2	16·3	45·5	28·3	75·5	46·9	108·6	67·5	—	—	103·3	64·2
		4·273		32·3	5·9	21·7	13·5	37·7	23·4	62·4	38·8	90·0	55·9	—	—	90·0	55·9
TYPE 4·236 DIESEL ENGINE (U1) & FIVE SPEED GEARBOX (CLOSE RATIO—FM3)																	
3500 kg	Single speed (AX6)	3·538	7·00R16	28·8	4·2	24·0	14·9	40·1	24·9	61·0	37·9	87·2	54·2	108·6	67·5	103·3	64·2
		4·273		35·7	5·9	19·8	12·3	33·3	20·7	50·4	31·3	72·1	44·8	90·0	55·9	90·0	55·9

MODEL DODGE S 46 Calculated Performance Data (Chassis Cab)

Plated GVW	Rear axle type	Rear axle ratio	Tyre equipment	Maximum gradient climbable as %		Maximum geared road speeds										Theoretical Maximum speed on level	
						1st gear		2nd gear		3rd gear		4th gear		5th gear			
				1st gear	Top gear	kph	mph	kph	mph	kph	mph	kph	mph	kph	mph	kph	mph
TYPE 2 LITRE PETROL ENGINE (L3) & FOUR SPEED GEARBOX (WIDE RATIO—FN2)																	
4600 kg	Single speed (AX6)	5·43	6·50R16	27·0	3·0	21·1	13·1	39·6	24·6	70·5	43·8	119·9	74·5	—	—	103·3	64·2
TYPE 2 LITRE PETROL ENGINE (L3) & FIVE SPEED GEARBOX (WIDE RATIO—FM2)																	
4600 kg	Single speed (AX6)	5·43	6·50R16	31·8	3·0	18·3	11·4	33·2	20·6	57·6	35·8	86·9	54·0	119·9	74·5	103·3	64·2
TYPE 4·236 DIESEL ENGINE (U1) & FOUR SPEED GEARBOX (WIDE RATIO—FN2)																	
4600 kg	Single speed (AX6)	3·538	6·50R16	29·0	3·3	18·2	11·3	34·0	21·1	60·5	37·6	103·2	64·1	—	—	100·1	62·2
		4·273		36·0	4·6	15·1	9·4	28·2	17·5	50·1	31·1	85·3	53·0	—	—	85·3	53·0
TYPE 4·236 DIESEL ENGINE (U1) & FIVE SPEED GEARBOX (WIDE RATIO—FM2)																	
4600 kg	Single speed (AX6)	3·538	6·50R16	34·1	3·3	15·8	9·8	28·5	17·7	49·6	30·8	74·7	46·4	103·2	64·1	100·1	62·2
		4·273		42·6	4·6	13·0	8·1	23·7	14·7	41·0	25·5	61·8	38·4	85·3	53·0	85·3	53·0

MODEL DODGE S 35 Calculated Performance Data (Chassis Cab)

Plated GVW	Rear axle type	Rear axle ratio	Tyre equipment	Maximum gradient climbable as %		Maximum geared road speeds										Theoretical Maximum speed on level	
						1st gear		2nd gear		3rd gear		4th gear		5th gear			
				1st gear	Top gear	kph	mph	kph	mph	kph	mph	kph	mph	kph	mph	kph	mph
TYPE 2 LITRE PETROL ENGINE (L3) & FOUR SPEED GEARBOX (WIDE RATIO—FN2)																	
3500 kg	Single speed (AX1)	5·57	7·00R16	35·8	4·0	21·7	13·5	40·7	25·3	72·4	45·0	123·3	76·6	—	—	106·5	66·2
TYPE 2 LITRE PETROL ENGINE (L3) & FIVE SPEED GEARBOX (WIDE RATIO—FM2)																	
3500 kg	Single speed (AX1)	5·57	7·00R16	42·4	4·0	18·2	11·7	34·1	21·2	59·2	36·8	89·2	55·4	123·3	76·6	106·5	66·2
TYPE 4·236 DIESEL ENGINE (U1) & FOUR SPEED GEARBOX (CLOSE RATIO—FN3)																	
3500 kg	Single speed (AX6)	3·538	7·00R16	26·1	4·2	26·2	16·3	45·5	28·3	75·5	46·9	108·6	67·5	—	—	103·3	64·2
		4·273		32·3	5·9	21·7	13·5	37·7	23·4	62·4	38·8	90·0	55·9	—	—	90·0	55·9
TYPE 4·236 DIESEL ENGINE (U1) & FIVE SPEED GEARBOX (CLOSE RATIO—FM3)																	
3500 kg	Single speed (AX6)	3·538	7·00R16	28·8	4·2	24·0	14·9	40·1	24·9	61·0	37·9	87·2	54·2	108·6	67·5	103·3	64·2
		4·273		35·7	5·9	19·8	12·3	33·3	20·7	50·4	31·3	72·1	44·8	90·0	55·9	90·0	55·9

MODEL DODGE S 46 Calculated Performance Data (Chassis Cab)

Plated GVW	Rear axle type	Rear axle ratio	Tyre equipment	Maximum gradient climbable as %		Maximum geared road speeds										Theoretical Maximum speed on level	
						1st gear		2nd gear		3rd gear		4th gear		5th gear			
				1st gear	Top gear	kph	mph	kph	mph	kph	mph	kph	mph	kph	mph	kph	mph
TYPE 2 LITRE PETROL ENGINE (L3) & FOUR SPEED GEARBOX (WIDE RATIO—FN2)																	
4600 kg	Single speed (AX6)	5·43	6·50R16	27·0	3·0	21·1	13·1	39·6	24·6	70·5	43·8	119·9	74·5	—	—	103·3	64·2
TYPE 2 LITRE PETROL ENGINE (L3) & FIVE SPEED GEARBOX (WIDE RATIO—FM2)																	
4600 kg	Single speed (AX6)	5·43	6·50R16	31·8	3·0	18·3	11·4	33·2	20·6	57·6	35·8	86·9	54·0	119·9	74·5	103·3	64·2
TYPE 4·236 DIESEL ENGINE (U1) & FOUR SPEED GEARBOX (WIDE RATIO—FN2)																	
4600 kg	Single speed (AX6)	3·538	6·50R16	29·0	3·3	18·2	11·3	34·0	21·1	60·5	37·6	103·2	64·1	—	—	100·1	62·2
		4·273		36·0	4·6	15·1	9·4	28·2	17·5	50·1	31·1	85·3	53·0	—	—	85·3	53·0
TYPE 4·236 DIESEL ENGINE (U1) & FIVE SPEED GEARBOX (WIDE RATIO—FM2)																	
4600 kg	Single speed (AX6)	3·538	6·50R16	34·1	3·3	15·8	9·8	28·5	17·7	49·6	30·8	74·7	46·4	103·2	64·1	100·1	62·2
		4·273		42·6	4·6	13·0	8·1	23·7	14·7	41·0	25·5	61·8	38·4	85·3	53·0	85·3	53·0

Plated GVW	Rear axle type	Rear axle ratio	Tyre equipment	Maximum gradient climbable as %		Maximum geared road speeds										Theoretical Maximum speed on level	
						1st gear		2nd gear		3rd gear		4th gear		5th gear			
				1st gear	Top gear	kph	mph	kph	mph	kph	mph	kph	mph	kph	mph	kph	mph

TYPE RG 225 PETROL ENGINE (M2) & FOUR SPEED GEARBOX (CLOSE RATIO—FN3)

3500 kg	Single speed (AX6)	4·273	7·00R16	28·0	4·8	29·5	18·3	51·2	31·8	84·8	52·7	122·0	75·8	—	—	111·0	69·0
		4·875		32·5	6·0	25·7	16·0	44·7	27·8	74·4	46·2	107·0	66·5	—	—	107·0	66·5

TYPE RG 225 PETROL ENGINE (M2) & FIVE SPEED GEARBOX (CLOSE RATIO—FM3)

3500 kg	Single speed (AX6)	4·273	7·00R16	30·9	4·8	27·0	16·8	45·1	28·0	68·4	42·5	98·0	60·9	122·0	75·8	111·0	69·0
		4·875		36·0	6·0	23·7	14·7	39·6	24·6	60·0	37·3	85·8	53·3	107·0	66·5	107·0	66·5

TYPE 6·247 DIESEL ENGINE (Z2) & FOUR SPEED GEARBOX (CLOSE RATIO—FN3)

3500 kg	Single speed (AX6)	4·273	7·00R16	28·2	3·6	27·8	17·3	48·4	30·1	80·3	49·9	115·6	71·8	—	—	113·8	70·7
		4·875		32·8	5·0	24·5	15·2	42·5	26·4	70·5	43·8	101·4	63·0	—	—	101·4	63·0

TYPE 6·247 DIESEL ENGINE (Z2) & FIVE SPEED GEARBOX (CLOSE RATIO—FM3)

3500 kg	Single speed (AX6)	4·273	7·00R16	31·2	3·6	25·6	15·9	42·8	26·6	64·9	40·3	92·9	57·7	115·6	71·8	113·8	70·7
		4·875		36·3	5·0	22·4	13·9	37·5	23·3	56·8	35·3	81·3	50·5	101·4	63·0	101·4	63·0

Plated GVW	Rear axle type	Rear axle ratio	Tyre equipment	Maximum gradient climbable as %		Maximum geared road speeds										Theoretical Maximum speed on level	
						1st gear		2nd gear		3rd gear		4th gear		5th gear			
				1st gear	Top gear	kph	mph	kph	mph	kph	mph	kph	mph	kph	mph	kph	mph

TYPE RG 225 PETROL ENGINE (M2) & FOUR SPEED GEARBOX (CLOSE RATIO—FN3)

4600 kg	Single speed (AX6)	4·273	6·50R16	22·0	3·7	27·8	17·3	48·4	30·1	80·5	50·0	115·9	72·0	—	—	107·5	66·8
		4·875		25·4	4·7	24·5	15·2	42·5	26·4	70·5	43·8	101·5	63·1	—	—	101·5	63·1

TYPE RG 225 PETROL ENGINE (M2) & FIVE SPEED GEARBOX (CLOSE RATIO—FM3)

4600 kg	Single speed (AX6)	4·273	6·50R16	24·1	3·7	25·6	15·9	42·8	26·6	65·0	40·4	93·0	57·8	115·9	72·0	107·5	66·8
		4·875		27·9	4·7	22·4	13·9	37·5	23·3	57·0	35·4	81·4	50·6	101·5	63·1	101·5	63·1

TYPE 6·247 DIESEL ENGINE (Z2) & FOUR SPEED GEARBOX (WIDE RATIO—FN2)

4600 kg	Single speed (AX6)	4·273	6·50R16	31·4	2·9	19·3	12·0	36·2	22·5	64·4	40·0	109·8	68·2	—	—	109·8	68·2
		4·875		36·6	4·0	16·9	10·5	31·7	19·7	56·5	35·1	96·2	59·8	—	—	96·2	59·8

TYPE 6·247 DIESEL ENGINE (Z2) & FIVE SPEED GEARBOX (WIDE RATIO—FM2)

4600 kg	Single speed (AX6)	4·273	6·50R16	37·1	2·9	16·7	10·4	30·3	18·8	52·8	32·8	79·5	49·4	109·8	68·2	109·8	68·2
		4·875		43·3	4·0	14·6	9·1	26·6	16·5	46·2	28·7	69·7	43·3	96·2	59·8	96·2	59·8

Plated GVW	Rear axle type	Rear axle ratio	Tyre equipment	Maximum gradient climbable as %		Maximum geared road speeds										Theoretical Maximum speed on level	
						1st gear		2nd gear		3rd gear		4th gear		5th gear			
				1st gear	Top gear	kph	mph	kph	mph	kph	mph	kph	mph	kph	mph	kph	mph

TYPE 4·236 DIESEL ENGINE (U1) & FOUR SPEED GEARBOX (WIDE RATIO—FN2)

5600 kg	Single speed (AX6)	3·538	7·00R16	22·1	2·2	19·2	11·9	35·9	22·3	63·7	39·6	108·6	67·5	—	—	96·4	59·9
		4·273		27·1	3·3	15·9	9·9	29·6	18·4	52·8	32·8	90·0	55·9	—	—	90·0	55·9

TYPE 4·236 DIESEL ENGINE (U1) & FIVE SPEED GEARBOX (WIDE RATIO—FM2)

5600 kg	Single speed (AX6)	3·538	7·00R16	25·8	2·2	16·6	10·3	29·9	18·6	52·1	32·4	78·7	48·9	108·6	67·5	96·4	59·9
		4·273		31·9	3·3	13·7	8·5	24·8	15·4	43·3	26·9	65·2	40·5	90·0	55·9	90·0	55·9

TYPE RG 225 PETROL ENGINE (M2) & FOUR SPEED GEARBOX (WIDE RATIO—FN2)

5600 kg	Single speed (AX6)	4·273	7·00R16	23·6	2·6	21·6	13·4	40·2	25·0	71·6	44·5	122·0	75·8	—	—	105·1	65·3
		4·875		27·2	3·3	18·8	11·7	35·2	21·9	62·8	39·0	107·0	66·5	—	—	104·1	64·7

TYPE RG 225 PETROL ENGINE (M2) & FIVE SPEED GEARBOX (WIDE RATIO—FM2)

5600 kg	Single speed (AX6)	4·273	7·00R16	27·6	2·6	18·7	11·6	33·8	21·0	58·6	36·4	88·4	54·9	122·0	75·8	105·1	65·3
		4·875		32·1	3·3	16·4	10·2	29·6	18·4	94·3	31·9	77·4	48·1	107·0	66·5	104·1	64·7

Plated GVW	Rear axle type	Rear axle ratio	Tyre equipment	Maximum gradient climbable as %		Maximum geared road speeds										Theoretical Maximum speed on level	
						1st gear		2nd gear		3rd gear		4th gear		5th gear			
				1st gear	Top gear	kph	mph	kph	mph	kph	mph	kph	mph	kph	mph	kph	mph

TYPE 4·236 DIESEL ENGINE (U1) FOUR SPEED GEARBOX (WIDE RATIO—FN2)

6600 kg	Single speed (AX8)	4·273	7·00R16	22·7	2·7	15·9	9·9	29·6	18·4	52·8	32·8	90·0	55·9	—	—	90·0	55·9
		4·875		26·1	3·3	13·8	8·6	26·1	16·2	46·3	28·8	78·9	49·0	—	—	78·9	49·0

TYPE 4·236 DIESEL ENGINE (U1) & FIVE SPEED GEARBOX (WIDE RATIO—FM2)

6600 kg	Sinlge speed (AX8)	4·273	7·00R16	26·5	2·7	13·7	8·5	24·8	15·4	43·3	26·9	65·2	40·5	90·0	55·9	90·0	55·9
		4·875		30·7	3·3	12·1	7·5	21·7	13·5	37·8	23·5	57·1	35·5	78·9	49·0	78·9	49·0

TYPE RG 225 PETROL ENGINE (M2) & FOUR SPEED GEARBOX (WIDE RATIO—FN2)

6600 kg	Single speed (AX8)	4·875	7·00R16	22·8	2·7	18·8	11·7	35·2	21·9	62·8	39·0	107·0	66·5	—	—	101·7	63·2
		5·43		25·6	3·2	16·9	10·5	31·7	19·7	56·3	35·0	96·0	59·7	—	—	96·0	59·7

TYPE RG 225 PETROL ENGINE (M2) & FIVE SPEED GEARBOX (WIDE RATIO—FM2)

6600 kg	Single speed (AX8)	4·875	7·00R16	26·6	2·7	16·4	10·2	29·6	18·4	51·3	31·9	77·4	48·1	107·0	66·5	101·7	63·2
		5·43		30·1	3·2	14·6	9·1	26·6	16·5	46·2	28·7	69·5	43·2	96·0	59·7	96·0	59·7

Plated GVW	Rear axle type	Rear axle ratio	Tyre equipment	Maximum gradient climbable as %		Maximum geared road speeds										Theoretical Maximum speed on level	
						1st gear		2nd gear		3rd gear		4th gear		5th gear			
				1st gear	Top gear	kph	mph	kph	mph	kph	mph	kph	mph	kph	mph	kph	mph

TYPE 6·247 DIESEL ENGINE (Z2) & FOUR SPEED GEARBOX (WIDE RATIO—FN2)

5600 kg	Single speed (AX6)	4·273	7·00R16	23·8	1·8	20·4	12·7	38·1	23·7	67·9	42·2	115·6	71·8	—	—	107·2	66·6
		4·875		27·5	2·7	17·9	11·1	33·5	20·8	59·5	37·0	101·4	63·0	—	—	101·4	63·0

TYPE 6·247 DIESEL ENGINE (Z2) & FIVE SPEED GEARBOX (WIDE RATIO—FM2)

5600 kg	Single speed (AX6)	4·273	7·00R16	27·9	1·8	17·7	11·0	32·0	19·9	55·7	34·5	83·7	52·0	115·6	71·8	107·2	66·6
		4·875		32·4	2·7	15·4	9·6	28·0	17·4	48·8	30·3	73·4	45·6	101·4	63·0	101·4	63·0

Plated GVW	Rear axle type	Rear axle ratio	Tyre equipment	Maximum gradient climbable as %		Maximum geared road speeds										Theoretical Maximum speed on level	
						1st gear		2nd gear		3rd gear		4th gear		5th gear			
				1st gear	Top gear	kph	mph	kph	mph	kph	mph	kph	mph	kph	mph	kph	mph

TYPE 6·247 DIESEL ENGINE (Z2) & FOUR SPEED GEARBOX (WIDE RATIO—FN2)

6600 kg	Single speed (AX8)	4·875	7·00R16	23·0	2·1	17·9	11·1	33·5	20·8	59·5	37·0	101·4	63·0	—	—	101·4	63·0
		5·43		25·9	2·8	16·1	10·0	30·1	18·7	53·4	33·2	90·9	56·5	—	—	90·9	56·5

TYPE 6·247 DIESEL ENGINE (Z2) & FIVE SPEED GEARBOX (WIDE RATIO—FM2)

6600 kg	Single speed (AX8)	4·875	7·00R16	26·9	2·1	15·4	9·6	28·0	17·4	48·8	30·3	73·4	45·6	101·4	63·0	101·4	63·0
		5·43		30·4	2·8	13·8	8·6	25·1	15·6	43·8	27·2	65·8	40·9	90·9	56·5	90·9	56·5

Plated GVW	Rear axle type	Rear axle ratio	Tyre equipment	Maximum gradient climbable as %		Maximum geared road speeds										Theoretical Maximum speed on level	
						1st gear		2nd gear		3rd gear		4th gear		5th gear			
				1st gear	Top gear	kph	mph	kph	mph	kph	mph	kph	mph	kph	mph	kph	mph
TYPE 4,236 DIESEL ENGINE (U1) AND FOUR SPEED GEARBOX (WIDE RATIO—FN2)																	
7500 kg	Single speed (AX9)	4.273	8.5R 17.5	18.6	2.1	16.2	10.1	30.6	19.0	54.2	33.7	92.4	57.4	—	—	90.9	56.5
		4.875		21.8	2.7	14.3	8.9	26.7	16.6	47.5	29.5	80.9	50.3	—	—	80.9	50.3
TYPE 4.236 DIESEL ENGINE (U1) AND FIVE SPEED GEARBOX (WIDE RATIO—FM2)																	
7500 kg	Single speed (AX9)	4.273	8.5R 17.5	22.1	2.1	14.2	8.8	25.6	15.9	44.4	27.6	66.9	41.6	92.4	57.4	90.9	56.5
		4.875		22.5	2.7	12.4	7.7	22.4	13.9	38.9	24.2	58.6	36.4	80.9	50.3	80.9	50.3
TYPE 6.247 DIESEL ENGINE (Z2) AND FOUR SPEED GEARBOX (WIDE RATIO—FN2)																	
7500 kg	Single speed (AX9)	5.43	8.5R 17.5	21.3	2.2	16.4	10.2	30.9	19.2	54.9	34.1	93.5	58.1	—	—	93.5	58.1
		6.00		23.8	2.8	14.9	9.3	28.0	17.4	49.7	30.9	84.6	52.6	—	—	84.6	52.6
TYPE 6.247 DIESEL ENGINE (Z2) AND FIVE SPEED GEARBOX (WIDE RATIO—FM2)																	
7500 kg	Single speed (AX9)	5.43	8.5R 17.5	24.9	2.2	14.3	8.9	25.7	16.0	44.9	27.9	67.7	42.1	93.5	58.1	93.5	58.1
		6.00		27.8	2.8	12.9	8.0	23.3	14.5	40.7	25.3	61.3	38.1	84.6	52.6	84.6	52.6

50 SERIES PERFORMANCE PREDICTION

MODEL - S35 3500 kg G.V.W.

Engine - Perkins 4.236 Diesel

Gearbox	Rear Axle Type and Tyre Size	Ratios	Max. Rolling Grade (%)	Maximum Speeds m.p.h.			
				Geared	Low	Van	High
FX 1 Five Speed	AX 6 Single Speed 8R 17.5C	3.909	45.1	63.8	66.2	64.4	53.9
		3.538	40.0	70.5	67.2	63.4	52.3
		4.273	50.5	58.4	61.6	61.0	54.9
		4.875	60.2	51.2	55.0	54.6	53.3

Engine - Chrysler 6P.225 Petrol

Gearbox	Rear Axle Type and Tyre Size	Ratios	Max. Rolling Grade (%)	Maximum Speeds m.p.h.			
				Geared	Low	Van	High
FM 6 Five Speed	AX 6 Single Speed 8R 17.5C	4.273	44.8	66.7	70.4	67.0	55.7
		3.909	40.3	72.9	70.3	66.2	53.1
		4.875	53.0	58.5	69.4	66.5	57.5
FA 1 Automatic	AX 6 Single Speed 8R 17.5C	4.273	20.0	73.0	72.3	70.1	68.2
		4.875	20.0	63.9	71.8	69.7	67.8

Engine - Perkins T4.38 Turbocharged Diesel

Gearbox	Rear Axle Type and Tyre Size	Ratios	Max. Rolling Grade (%)	Maximum Speeds m.p.h.			
				Geared	Low	Van	High
FM 4 Five Speed	AX 6 Single Speed 8R 17.5C	3.538	42.6	82.8	70.0	65.8	53.6
		3.909	48.1	75.0	71.1	67.2	55.7
		4.273	54.1	68.6	69.4	67.9	57.0
FA 1 Automatic	AX 6 Single Speed 8R 17.5C	3.909	36.9	59.2	64.9	64.2	58.1
		4.273	40.6	54.2	60.4	59.9	57.1

Frontal Area :-LOW 45sq.ft. ;VAN 52sq.ft. ;HIGH 75sq.ft.

50 SERIES PERFORMANCE PREDICTION

MODEL - S46 4600 kg G.V.W.

Engine - Perkins 4.236 Diesel

Gearbox	Rear Axle Type and Tyre Size	Ratios	Max. Rolling Grade (%)	Maximum Speeds m.p.h.			
				Geared	Low	Van	High
FX 1 Five Speed	AX 6 Single Speed 8R 17.5C	3.909	32.6	63.8	65.3	62.4	52.2
		3.538	29.1	70.5	64.7	61.1	50.5
		4.273	36.2	58.4	61.2	60.7	53.3
		4.875	42.3	51.2	54.7	54.4	53.1

Engine - Chrysler 6P.225 Petrol

Gearbox	Rear Axle Type and Tyre Size	Ratios	Max. Rolling Grade (%)	Maximum Speeds m.p.h.			
				Geared	Low	Van	High
FM 6 Five Speed	AX 6 Single Speed 8R 17.5C	3.909	29.3	72.9	67.9	64.0	50.7
		4.273	32.5	66.7	68.4	65.1	53.7
		4.875	37.8	58.5	67.6	64.9	56.1
FA 1 Automatic	AX 6 Single Speed 8R 17.5C	4.273	21.1	69.0	70.1	68.2	66.0
		4.875	24.1	60.5	69.7	67.8	65.1

Engine - Perkins T4.38 Turbocharged Diesel

Gearbox	Rear Axle Type and Tyre Size	Ratios	Max. Rolling Grade (%)	Maximum Speeds m.p.h.			
				Geared	Low	Van	High
FM 4 Five Speed	AX 6 Single Speed 8R 17.5C	3.538	28.8	82.8	66.6	62.3	49.7
		3.909	32.3	75.0	68.5	64.5	52.7
		4.273	35.8	68.6	68.9	65.7	54.7
FA 1 Automatic	AX 6 Single Speed 8R 17.5C	3.909	27.0	59.2	64.5	63.7	56.6
		4.273	29.6	54.2	60.0	59.5	56.2

Frontal Area :-LOW 45sq.ft. ;VAN 52sq.ft. ;HIGH 75sq.ft.

50 SERIES PERFORMANCE PREDICTION

MODEL - S56 5600 kg G.V.W.

Engine - Perkins 4.236 Diesel

Gearbox	Rear Axle Type and Tyre Size	Ratios	Max. Rolling Grade (%)	Maximum Speeds m.p.h.			
				Geared	Low	Van	High
FX 1 Five Speed	AX 6 Single Speed 8R 17.5C	3.909	26.1	63.8	63.8	60.4	50.6
		4.273	28.9	58.4	60.9	60.2	51.9
		4.875	33.6	51.2	54.4	54.1	52.5
		5.429	38.1	45.9	49.5	49.3	48.4

Engine - Chrysler 6P.225 Petrol

Gearbox	Rear Axle Type and Tyre Size	Ratios	Max. Rolling Grade (%)	Maximum Speeds m.p.h.			
				Geared	Low	Van	High
FM 6 Five Speed	AX 6 Single Speed 8R 17.5C	4.273	25.7	66.7	66.3	63.0	51.6
		4.875	30.2	58.5	66.1	63.4	54.6
		5.429	34.1	52.5	64.2	62.5	55.1
FA 1 Automatic	AX 6 Single Speed 8R 17.5C	4.875	18.4	63.9	67.7	65.5	63.2
		5.429	20.4	57.4	66.5	64.3	62.1

Engine - Perkins T4.38 Turbocharged Diesel

Gearbox	Rear Axle Type and Tyre Size	Ratios	Max. Rolling Grade (%)	Maximum Speeds m.p.h.			
				Geared	Low	Van	High
FM 4 Five Speed	AX 6 Single Speed 8R 17.5C	3.538	24.8	82.8	65.1	61.3	49.7
		3.909	27.7	75.0	66.7	63.1	52.3
		4.273	30.7	68.6	67.5	64.2	54.0
		4.875	35.7	60.1	62.0	61.3	55.5
		5.429	40.5	54.0	56.9	56.4	54.5
FA 1 Automatic	AX 6 Single Speed 8R 17.5C	4.273	23.8	54.2	59.7	59.2	55.5
		4.875	27.1	47.5	53.4	53.1	51.8

Frontal Area :-LOW 45sq.ft. ;VAN 52sq.ft. ;HIGH 75sq.ft.

50 SERIES PERFORMANCE PREDICTION

MODEL - S66 6600 kg G.V.W.

Engine - Perkins 4.236 Diesel

Gearbox	Rear Axle Type and Tyre Size	Ratios	Max. Rolling Grade (%)	Maximum Speeds m.p.h.			
				Geared	Low	Van	High
FX 1 Five Speed	AX 8 Single Speed 8R 17.5	4.273	24.1	58.4	60.5	59.2	50.5
		3.909	21.8	63.8	61.6	58.4	48.9
		4.875	27.9	51.2	54.2	53.9	51.7
		5.429	31.5	45.9	49.3	49.1	48.2

Engine - Chrysler 6P.225 Petrol

Gearbox	Rear Axle Type and Tyre Size	Ratios	Max. Rolling Grade (%)	Maximum Speeds m.p.h.			
				Geared	Low	Van	High
FM 6 Five Speed	AX 8 Single Speed 8R 17.5	4.273	21.4	66.7	64.3	61.0	49.6
		4.875	24.8	58.5	64.3	61.7	53.1
		5.429	28.0	52.5	63.0	61.0	53.8
FA 1 Automatic	AX 8 Single Speed 8R 17.5	5.429	17.0	57.4	65.4	63.2	61.1
		6.000	18.7	52.0	63.5	61.2	59.1

Engine - Perkins T4.38 Turbocharged Diesel

Gearbox	Rear Axle Type and Tyre Size	Ratios	Max. Rolling Grade (%)	Maximum Speeds m.p.h.			
				Geared	Low	Van	High
FM 4 Five Speed	AX 8 Single Speed 8R 17.5	3.909	23.1	75.0	64.5	61.1	50.6
		4.273	25.5	68.6	65.6	62.4	52.5
		4.875	29.6	60.1	61.5	60.9	54.2
		5.429	33.4	54.0	56.5	56.1	54.2
FA 1 Automatic	AX 8 Single Speed 8R 17.5	4.875	22.6	47.5	53.1	52.8	51.5
		5.429	25.1	42.7	48.4	48.2	47.2

Frontal Area :-LOW 45sq.ft. ;VAN 52sq.ft. ;HIGH 75sq.ft.

50 SERIES PERFORMANCE PREDICTION

MODEL - S75 7500 kg G.V.W.

Engine - Perkins 4.236 Diesel

Gearbox	Rear Axle Type and Tyre Size	Ratios	Max. Rolling Grade (%)	Maximum Speeds m.p.h.			
				Geared	Low	Van	High
FX 1 Five Speed	AX 9 Single Speed 8.5R 17.5	4.273	20.5	59.7	60.5	57.4	48.8
		4.875	23.7	52.3	55.0	54.6	50.3
		5.429	26.7	47.0	50.1	49.8	48.9

Engine - Perkins T4.38 Turbocharged Diesel

Gearbox	Rear Axle Type and Tyre Size	Ratios	Max. Rolling Grade (%)	Maximum Speeds m.p.h.			
				Geared	Low	Van	High
FM 4 Five Speed	AX 9 Single Speed 8.5R 17.5	4.273	21.7	70.2	63.9	60.4	50.6
		4.875	25.0	61.5	62.3	61.5	52.7
		5.429	28.3	55.2	57.3	56.8	53.7

Frontal Area :-LOW 45sq.ft. ;VAN 52sq.ft. ;HIGH 75sq.ft.

50 SERIES PERFORMANCE PREDICTION

MODEL - S75 7500 kg G.V.W.

Engine - Perkins 4.236 Diesel

Gearbox	Rear Axle Type and Tyre Size	Ratios	Max. Rolling Grade (%)	Maximum Speeds m.p.h.			
				Geared	Low	Van	High
FX 1 Five Speed	AX 9 Single Speed 8.5R 17.5	4.273	20.5	59.7	60.5	57.4	48.8
		4.875	23.7	52.3	55.0	54.6	50.3
		5.429	26.7	47.0	50.1	49.8	48.9

Engine - Perkins T4.38 Turbocharged Diesel

Gearbox	Rear Axle Type and Tyre Size	Ratios	Max. Rolling Grade (%)	Maximum Speeds m.p.h.			
				Geared	Low	Van	High
FM 4 Five Speed	AX 9 Single Speed 8.5R 17.5	4.273	21.7	70.2	63.9	60.4	50.6
		4.875	25.0	61.5	62.3	61.5	52.7
		5.429	28.3	55.2	57.3	56.8	53.7

Frontal Area :-LOW 45sq.ft. ;VAN 52sq.ft. ;HIGH 75sq.ft.

Model Line-up

Model Code		DODGE S 35
Plated GVW		3500 kg (3·44 tons)
Body and Payload Allowance (Chassis cab)		1751 kg (3860 lb)—322.6 cm w/b 1705 kg (3759 lb)—365.8 cm w/b 1679 kg (3702 lb)—403.9 cm w/b
Wheelbase		322·6 cm (127 in) 365·8 cm (144 in) 403·9 cm (159 in)
Body and Chassis Type		Chassis/DAFE Chassis/cab Van (322·6 cm WB only) Van (365·8 cm WB only)
Standard Power Unit	Engine	2·0 litre (120 in³) four-cylinder in-line petrol (L3)
	Clutch	240 mm (9·5 in) SDP D/spring
	Gearbox	Four-speed synchromesh (no synchromesh on first gear)
Alternative Power Unit	Engine	3·68 litre (225 in³) six-cylinder in-line petrol (M2)
	Clutch	280 mm (11 in) SDP D/spring
	Gearbox	Four-speed synchromesh (no synchromesh on first gear)
Alternative Power Unit	Engine	3·86 litre (236 in³) four-cylinder in-line diesel (U1)
	Clutch	280 mm (11 in) SDP D/spring
	Gearbox	Four-speed synchromesh (no synchromesh on first gear)
Alternative Power Unit	Engine	4·05 litre (247 in³) six-cylinder in-line diesel (Z2)
	Clutch	280 mm (11 in) SDP D/spring
	Gearbox	Four-speed synchromesh (no synchromesh on first gear)
Rear Axle	Standard	Single-speed spiral bevel, 2540 kg (AX1) (L3 engine only)
	Standard with alternative engines	Single-speed spiral bevel, 4080 kg (AX6)
Brakes		Vacuum/hydraulic dual line
Standard Wheel and Tyre Equipment	Wheels	5·50F×16
	Tyres	7·00R×16 (12 PR) (Single formation at rear)

Model Line-Up

Model Code		DODGE S 46
Plated GVW		4600 kg (4·53 tons)
Body and Payload Allowance (Chassis cab)		2735 kg (6030 lb)—322.6 cm w/b 2689 kg (5928 lb)—365.8 cm w/b 2664 kg (5873 lb)—403.9 cm w/b
Wheelbase		322·6 cm (127 in) 365·8 cm (144 in) 403·9 cm (159 in)
Body and Chassis Type		Chassis/DAFE Chassis/cab Van (322·6 cm WB only) Van (365·8 cm WB only)
Standard Power Unit	Engine	2·0 litre (120 in³) four-cylinder in-line petrol (L3)
	Clutch	240 mm (9·5 in) SDP D/spring
	Gearbox	Four-speed synchromesh (no synchromesh on first gear)
Alternative Power Unit	Engine	3·68 litre (225 in³) six-cylinder in-line petrol (M2)
	Clutch	280 mm (11 in) SDP D/spring
	Gearbox	Four-speed synchromesh (no synchromesh on first gear)
Alternative Power Unit	Engine	3·86 litre (236 in³) four-cylinder in-line diesel (U1)
	Clutch	280 mm (11 in) SDP D/spring
	Gearbox	Four-speed synchromesh (no synchromesh on first gear)
Alternative Power Unit	Engine	4·05 litre (247 in³) six-cylinder in-line diesel (Z2)
	Clutch	280 mm (11 in) SDP D/spring
	Gearbox	Four-speed synchromesh (no synchromesh on first gear)
Rear Axle	Standard	Single-speed spiral bevel, 4080 kg (AX6)
Brakes		Vacuum/hydraulic dual line
Standard Wheel and Tyre Equipment	Wheels	4·50E×16
	Tyres	6·50R×16C (10 PR)

Model Line-Up

Model Code		DODGE S 56
Plated GVW		5600 kg (5·51 tons)
Body and Payload Allowance (Chassis cab)		3442 kg (7588 lb)—322.6 cm w/b 3420 kg (7540 lb)—365.8 cm w/b 3394 kg (7482 lb)—403.9 cm w/b
Wheelbase		322·6 cm (127 in) 365·8 cm (144 in) 403·9 cm (159 in)
Body and Chassis Type		Chassis/DAFE Chassis/cab Van (322·6 cm WB only) Van (365·8 cm WB only)
Standard Power Unit	Engine	3·86 litre (236 in³) four-cylinder in-line diesel (U1)
	Clutch	280 mm (11 in) SDP D/spring
	Gearbox	Four-speed synchromesh (no synchromesh on first gear)
Alternative Power Unit	Engine	3·68 litre (225 in³) six-cylinder in-line petrol (M2)
	Clutch	280 mm (11 in) SDP D/spring
	Gearbox	Four-speed synchromesh (no synchromesh on first gear)
Alternative Power Unit	Engine	4·05 litre (247 in³) six-cylinder in-line diesel (Z2)
	Clutch	280 mm (11 in) SDP D/spring
	Gearbox	Four-speed synchromesh (no synchromesh on first gear)
Rear Axle	Standard	Single-speed spiral bevel, 4080 kg (AX6)
Brakes		Vacuum/hydraulic dual line
Standard Wheel and Tyre Equipment	Wheels	5·25 x 17·5
	Tyres	8R 17·5L

Model Line-Up

Model Code		DODGE S 66
Plated GVW		6600 kg (6·5 tons)
Body and Payload Allowance (Chassis cab)		4387 kg (9672 lb)—322.6 cm w/b 4365 kg (9623 lb)—365.8 cm w/b 4339 kg (9566 lb)—403.9 cm w/b
Wheelbase		322·6 cm (127 in) 365·8 cm (144 in) 403·9 cm (159 in)
Body and Chassis Type		Chassis/DAFE Chassis/cab Van (322·6 cm WB only) Van (365·8 cm WB only)
Standard Power Unit	Engine	3·86 litre (236 in³) four-cylinder in-line diesel (U1)
	Clutch	280 mm (11 in) SDP D/spring
	Gearbox	Four-speed synchromesh (no synchromesh on first gear)
Alternative Power Unit	Engine	3·68 litre (225 in³) six-cylinder in-line petrol (M2)
	Clutch	280 mm (11 in) SDP D/spring
	Gearbox	Four-speed synchromesh (no synchromesh on first gear)
Alternative Power Unit	Engine	4·05 litre (247 in³) six-cylinder in-line diesel (Z2)
	Clutch	280 mm (11 in) SDP D/spring
	Gearbox	Four-speed synchromesh (no synchromesh on first gear)
Rear Axle	Standard	Single-speed spriral bevel, 5600 kg (AX8)
Brakes		Vacuum/hydraulic dual line
Standard Wheel and Tyre Equipment	Wheels	5·25 x 17·5
	Tyres	8R 17·5

Model Line-Up

Model Code		S 75
Plated GVW		7500 kg (7.38 tons)
Body & Payload Allowance (Chassis cab)		5122 kg (11291 lb)—322.6 cm w/b 5101 kg (11245 lb)—365.8 cm w/b 5079 kg (11197 lb)—403.9 cm w/b
Wheelbases		322.6 cm (127 in) 365.8 cm (144 in) 403.9 cm (159 in)
Body and Chassis Type		Chassis/DAFE Chassis cab Van (322.6 cm w/b) Van (403.9 cm w/b)
Standard Power Unit	Engine	3.86 litre (236 in^3) four-cylinder in-line diesel (U1)
	Clutch	280 mm (11 in) SDP D/spring
	Gearbox	Four-speed synchromesh (no synchromesh on first gear)
Alternative Power Unit	Engine	4.05 litre (247 in^3) six-cylinder in-line diesel (Z2)
	Clutch	280 mm (11 in) SDP D/Spring
	Gearbox	Four-speed synchromesh (no synchromesh on first gear)
Rear Axle	Standard	Single speed spiral bevel, 5700 kg (AX9)
Brakes		Air/hydraulic dual line
Standard Wheel and Tyre Equipment	Wheels	5.25 x 17.5 – 4.60
	Tyres	8.5R 17.5

DODGE 50 SERIES ORDERING CODES

EQUIPMENT – BASIC MODELS	CODE
GVW – 3500 kg (3.44 tons)	S 35
4600 kg (4.53 tons)	S 46
5600 kg (5.51 tons)	S 56
6600 kg (6.50 tons)	S 66
7500 kg (7.38 tons)	S 75
EQUIPMENT – ENGINES	
2.0 litre 4-cylinder in-line petrol	L3
3.68 litre 6-cylinder in-line petrol	M2
3.86 litre 4-cylinder in-line diesel	U1
4.05 litre 6-cylinder in-line diesel	Z2
EQUIPMENT – GEARBOXES	
Four-speed synchromesh, wide ratio	FN2
Four-speed synchromesh, close ratio	FN3
Five speed synchromesh, wide ratio	FM2
Five speed synchromesh, close ratio	FM3
EQUIPMENT – REAR AXLES	
2540 kg (5600 lb) capacity single speed	AX1
4080 kg (9000 lb) capacity single speed	AX6
5650 kg (12456 lb) capacity single speed	AX8
5700 kg (12566 lb) capacity single speed	AX9
Ratios – 3.538	AC2
4.273	AE3
4.875	AH4
5.430	AK7
5.570	AL2
6.000	AN1
EQUIPMENT – WHEELS	
6.00G x 16 – 4.80	RJ1
4.50E x 16 – 4.05	RJ4
5.50F x 16 – 1.25	RJ5
5.50F x 16 – 4.70	RJ6
5.25 x 17.5 – 1.25	RM1
5.25 x 17.5 – 4.60	RM2
EQUIPMENT – TYRES	
Any manufacturer	TA0
Dunlop	TD0
Firestone	TF0
Goodyear	TG0
Michelin	TM0
Pirelli	TP0
Special order tyres	TZ9
6.50R – 16 10 PR	VC4
7.00R – 16 12 PR	VD5
7.50R – 16 12 PR	VE5
8R 17.5 tubeless	VP1
8.5R 17.5 tubeless	VP2

DODGE 50 SERIES ORDERING CODES

EQUIPMENT – BASIC MODELS	CODE
GVW – 3500 kg (3.44 tons)	S 35
4600 kg (4.53 tons)	S 46
5600 kg (5.51 tons)	S 56
6600 kg (6.50 tons)	S 66
7500 kg (7.38 tons)	S 75
EQUIPMENT – ENGINES	
2.0 litre 4-cylinder in-line petrol	L3
3.68 litre 6-cylinder in-line petrol	M2
3.86 litre 4-cylinder in-line diesel	U1
4.05 litre 6-cylinder in-line diesel	Z2
EQUIPMENT – GEARBOXES	
Four-speed synchromesh, wide ratio	FN2
Four-speed synchromesh, close ratio	FN3
Five speed synchromesh, wide ratio	FM2
Five speed synchromesh, close ratio	FM3
EQUIPMENT – REAR AXLES	
2540 kg (5600 lb) capacity single speed	AX1
4080 kg (9000 lb) capacity single speed	AX6
5650 kg (12456 lb) capacity single speed	AX8
5700 kg (12566 lb) capacity single speed	AX9
Ratios – 3.538	AC2
4.273	AE3
4.875	AH4
5.430	AK7
5.570	AL2
6.000	AN1
EQUIPMENT – WHEELS	
6.00G x 16 – 4.80	RJ1
4.50E x 16 – 4.05	RJ4
5.50F x 16 – 1.25	RJ5
5.50F x 16 – 4.70	RJ6
5.25 x 17.5 – 1.25	RM1
5.25 x 17.5 – 4.60	RM2
EQUIPMENT – TYRES	
Any manufacturer	TA0
Dunlop	TD0
Firestone	TF0
Goodyear	TG0
Michelin	TM0
Pirelli	TP0
Special order tyres	TZ9
6.50R – 16 10 PR	VC4
7.00R – 16 12 PR	VD5
7.50R – 16 12 PR	VE5
8R 17.5 tubeless	VP1
8.5R 17.5 tubeless	VP2

COOLING SYSTEMS—50 SERIES

Model	S35, S46	S35, S46, S56, S66	S35, S46, S56, S66, S75	S35, S46, S56, S66, S75
Engine	2·0 litre petrol (L3)	3·68 litre petrol (M2)	3·86 litre diesel (U1)	4.05 litre diesel (Z2)
Water pump—Type and Drive	Centrifugal V-belt	Centrifugal V-belt	Centrifugal V-belt	Centrifugal V-belt
Fan—No of blades	Six	Seven	Six	Six
Diameter	322 mm (13 in)	457 mm (18 in)	406 mm (16 in)	432 mm (17 in)
Cowl	None	484 mm (19·0 in)	None	465 mm (18·0 in)
V-belt width	10 mm (0·39 in)	9·7 mm (0·375 in) High ride out	12·7 mm (0·50 in)	12·7 mm (0·50 in)
Radiator core	Tube and fin, crossflow type			
Frontal area	1787 cm^2 (277 in^2)			
Radiator relief valve	Pressure 0·42 kg/cm^2 (7 lb/in^2)			
Circulation control	Thermostat			
Capacity	11·92 litres (21 pints)	13·63 litres (24 pints)	16·47 litres (29 pints)	18·74 litres (33 pints)
Thermostat Temperature on seat Temperature off seat	 83 °C (181·4 °F) 96 °C (204·8 °F)	 90·6 °C (195 °F) 103·9 °C (219 °F)	 82 °C (179 °F) 92·2 °C (198 °F)	 82 °C (179 °F) 95 °C (203 °F)

CLUTCHES – DODGE HALF-TON RANGE

Model	**Dodge Half-ton Van, High-top, Pick-up**
Engine	1118 cm^3 four-cylinder petrol
Diameter and Type	Single dry plate
Lining Material Inside diameter Outside diameter Thickness Total area	Verto 181.5 KDXO 124 mm (4.88 in) 181.5 mm (7.14 in) 7.7 mm (0.303 in) 275.9 cm^2 (42.75 in^2)
Actuation	Hydraulic
Release Bearing	Ball bearing

CLUTCHES – SPACEVAN SERIES

Model	**2000, 2500**
Engine	1.72 litre petrol (LC or HC), 1.75 litre diesel
Diameter and type	216 mm (8½ in) single dry plate diaphragm spring
Lining Material Inside diameter Outside diameter Thickness Total area	Wound yarn facing 146 mm (5.75 in) 216 mm (8.5 in) 7.24 mm (0.285 in) 386 cm^2 (61.5 in^2)
Number of Pressure Springs Effective clamp load	Diaphragm spring 190 kg (420 lb)
Actuation	Hydraulic
Torque Capacity	12.45 kgf m (90 lbf ft)
Vibration Damper	Torsion spring
Release Bearing	Ball bearing

CLUTCHES—50 SERIES

Model	**S35, S46**	**S35, S46, S56, S66, S75**
Engine	2·0 litre petrol (L3)	3·68 litre petrol (M2), 3·86 litre diesel (U1), 4·0 litre diesel (Z2)
Clutch diameter and type	240 mm (9·5 in) SDP Diaphragm spring	280 mm (11·0 in) SDP Diaphragm spring
Lining Material Inside diameter Outside diameter Thickness Total area	2124F	2124F 172mm (6.77 in) 279 mm (10.98 in) 8.5 mm (2.988 in) 717 cm^2 (111.14 in^2)
Pressure Springs Number used Effective clamp load	One 495 da N	One 690 da N
Actuation	Hydraulic	Hydraulic
Torque Capacity		
Vibration Damper Method		
Release Bearing Type	Ball bearing	Ball bearing

ELECTRICAL SYSTEMS—50 SERIES

Model	S35, S46	S35, S46, S56, S66, S75
Engine	2·0 litre petrol (L3)	3·68 litre petrol (M2), 3·86 litre diesel (U1), 4·0 litre diesel (Z2)
Battery Voltage Number used Capacity at 10 hr rate	 12 One 68 amp hr	 12 One 128 amp hr
Generator Type Capacity	 Alternator 34 amp	
Starter Motor Type of drive Switch	 Pre-engaged Solenoid	
Headlights—Type Lights and beam control Parking lights Tail light—Type Stop Light Control	Lucas 178 mm (7·0 in) dia two single, 40 W dip beam, 45 W main beam Stalk switch 4 W contained within headlamps Combined stop and tail lamps—Stop 21 W, Tail 6 W Mechanical	
Horn Type Number used	 KLAMIX-MIXO TR 129 5 amp One	
Ignition switch	Solenoid	
Sparking plugs	Marchal GT 345 HA, Champion N7Y } (L3 engine)	Champion RBL 11Y (M2 engine)

PETROL ENGINES—50 SERIES

Model	S35, S46	S35, S46, S56, S66
Engine	Chrysler 4-cyl petrol (L3)	Chrysler 6-cyl petrol (M2)
Type and No of cylinders	In-line four	In-line six
Bore and stroke	91·7×75 mm (3·59×2·95 in)	86·36×104·77 mm (3·4×4·125 in)
Displacement	1981 cm³ (120 in)	3685 cm³ (225 in³)
Installed power	54 kW (72·5 bhp) at 4300 rpm	65,5 kW (88 bhp) at 3200 rpm
Max torque	145 Nm (107 lbf ft) at 2250 rpm	218 Nm (161 lbf ft) at 1600 rpm
Compression ratio	8·15:1	7·11:1
Firing order	1–3–4–2	1–5–3–6–2–4
Cylinder block and crankcase	Tin alloy cast iron	Cast iron
Pistons	Aluminium alloy	Aluminium alloy
Connecting rods	Steel	Steel
Crankshaft	Steel	Cast nodular iron
Bearings	Trimetal	Babbit
Valve Gear	Overhead camshaft	Pushrod operation
Lubrication	Pressure	Pressure
Pump Type	Gear	Rotor type (external)
Filter Type	Cartridge—full flow	Full flow replaceable element
Sump Capacity		
Cooling System	Water	Water
Fuel System		
Carburettor	Solex 34 BICMA (113)	Holley single choke downdraught
Fuel pump	Mechanical	Mechanical
Fuel Filters	Plastic	Replaceable element
Air Cleaner	Dry element	Dry element
Fuel Tank Capacity	85 litres (18.6 gallons)	85 litres (18.6 gallons)

DIESEL ENGINES—50 SERIES

Model	S35, S46, S56, S66, S75	S35, S46, S56, S66, S75
Engine	Perkins 4·236 (U1)	Perkins 6·247 (Z2)
Type and No of cylinders	In-line four	In-line six
Bore and stroke	98·4×127 mm (3·875×5·0 in)	92·0×101·6 mm (3·622×4·0 in)
Displacement	3867 cm³ (236 in³)	4052 cm³ (247·3 in³)
Installed power	54,2 kW (72·6 bhp) at 2800 rpm	69,7 kW (93·5 bhp) at 3600 rpm
Max torque installed	246 Nm (182 lbf ft) at 1400 rpm	219 Nm (162 lbf ft) at 2500 rpm
Compression ratio	16:1	21:1
Firing order	1–3–4–2	1–5–3–6–2–4
Cylinder block and crankcase	Cast iron monobloc with cast iron 'dry' type renewable cylinder liners	Cast iron monobloc wilh cast iron 'dry' liners
Pistons	Aluminium alloy	Aluminium alloy
Connecting rods	High tensile steel 'H' section stampings	Steel
Crankshaft	Chromium molybdenum steel forging with integral balance weights	Steel
Bearings	Aluminium tin-lined, steel backed	Aluminium tin-lined
Valve Gear	Pushrod operation	Pushrod operation
Lubrication	Pressure	Pressure
Pump Type	Spur gear driven from front of crankshaft	Rotor driven by crankshaft
Filter Type	Replaceable element	Replaceable element
Sump Capacity	8·0 litres (14 pints)	11·38 litres (20 pints)
Cooling System	Water	Water
Fuel System		
Fuel injection pump	Distributor type with mechanical governor and automatic advance/retard device	Distributor type
Fuel pump	Mechanical	Mechanical
Fuel Filters	Renewable element	Renewable cannister with internal element
Air Cleaner	Dry type	Dry type
Fuel Tank Capacity	85 litres (18.6 gallons)	85 litres (18.6 gallons)

FUEL AND EXHAUST SYSTEMS—50 SERIES

Model	S35, S46	S35, S46, S56, S66
Engine	Chrysler 4-cyl petrol (L3)	Chrysler 6-cyl petrol (M2)
Carburettor	Solex 34 BICMA (113)	Holley single barrel downdraught
Nominal throat size		
Number used	One	One
Air cleaner	Dry element	Dry element
Manifold heat control		
Fuel Line Filter—Main	Plastic	Replaceable element
Fuel Lift Pump	Mechanical	Mechanical
Drive		From camshaft
Pressure	245 at 294 m/bar	240–345 m/bar (3·5–5·0 lb/in²)
Filter		
Silencer—Type		
Length and diameter		
Number used	One	One

Model	S35, S46, S56, S66, S75	S35, S46, S56, S66, S75
Engine	Perkins 4·236 (U1) diesel	Perkins 6·247 (Z2) diesel
Fuel Injection Pump	Rotary distributor	Rotary distributor
Number used	One	One
Air cleaner	Dry single stage	Dry single stage
Fuel Line Filter—Main	Paper element	Paper element
Governor—Type	Hydraulic	Hydraulic
Rec maximum rpm	2800	3600
Fuel Lift Pump	Diaphragm	Mechanical
Drive	Eccentric on camshaft	
Pressure	690 m/bar (10 lb/in²)	345–550 m/bar (5–8 lb/in²)
Filter	Gauze in water trap	Renewable cannister with internal element

TRANSMISSION AVAILABILITY—50 SERIES

Model		S35				S46				S56			S66			S75	
Engine code		L3	U1	M2	Z2	L3	U1	M2	Z2	U1	M2	Z2	U1	M2	Z2	U1	Z2
Chrysler 4-speed wide ratio	FN2	S				S	S		S	S	S	S	S	S	S	S	S
Chrysler 4-speed close ratio	FN3		S	S	S			S									
Turner 5-speed wide ratio	FM2	O				O	O		O	O	O	O	O	O	O	O	O
Turner 5-speed close ratio	FM3		O	O	O			O									

S = Standard
O = Optional

TRANSMISSIONS—50 SERIES

Model	S35, S46, S56, S66, S75		S35, S46, S56, S66, S75	
Type	Four speed synchromesh		Five speed synchromesh	
Shift Lever	Direct		Direct	
	FN2	FN3	FM2	FM3
Ratios				
First	5·67:1	4·15:1	6·55:1	4·53:1
Second	3·03:1	2·39:1	3·62:1	2·71:1
Third	1·70:1	1·44:1	2·08:1	1·78:1
Fourth	1:1	1:1	1·38:1	1·25:1
Fifth	—	—	1:1	1:1
Reverse	5·35:1	3·91:1	5·91:1	4·08:1
Maximum Input Torque (on highway)	25·6 m.kg (185 lb.ft)	25·6 m.kg (185 lb.ft)	28 m.kg (200 lb.ft)	28 m.kg (200 lb.ft)
Bearings	L3 & M2 PLAIN, U1 BALL, Z2 NEEDLE ROLLER			
Primary shaft—pilot and main	Ball bearing		Taper roller	
Mainshaft—spigot	Needle roller		Taper roller	
Mainshaft—rear	Ball bearing		Taper roller	
Countershaft—front	Needle roller		Taper roller	
Countershaft—rear	Needle roller		Taper roller	
Reverse idler	Bush		Needle roller	
Power Take-off				
Opening location	Side LH		Side RH	
Type	SAE		SAE	
No of facings	One		One	
Gear—type/No of teeth	Helical 31	Helical 29	Helical 34	Helical 3
Speed at 1000 engine rpm	474	647	448	647
Rotation	Clockwise	Clockwise	Clockwise	Clockwise
Lubricant Capacity	2·5 litres (4·4 pints)		4·27 litres (7·51 pints)	

50 SERIES
PLATED GVW—3500 kg (3·44 tons)

DODGE MODEL S 35

Model availability and Wheelbase lengths	
Drive-away front end	322·6 mm (127 in)
Chassis/cab	365·8 mm (144 in)
	403·9 mm (159 in)
Van	322·6 mm (127 in)
Van	365·8 mm (144 in)

MINIMUM SPECIFICATION

Alternator	12 V 34 amp
Axle, front Capacity	Reverse Elliot I beam 2300 kg (5072 lb)
Axle, rear Capacity and number of speeds Ratios	Spiral bevel 2540 kg (5600 lb) single speed REFER TO DRIVELINE COMBINATIONS PANEL
Battery—Capacity	12 V 68 amp hr
Brakes, Service—Type Size—Front Rear Actuation Total lining area	2 LS (Front) DS (Rear) 282·4×76·2 mm (11·125×3 in) 307·9×76·2 mm (12·125×3 in) Vacuum hydraulic, dual line with LS valve 1768 cm² (274·1 in²)
Secondary/Park brake Location Lining area	Mechanical Rear wheels 966 cm² (149·8 in²)
Cab	All steel semi forward control
Clutch—Type and actuation Size and lining area	Single dry plate, diaphragm spring, hydraulic 240 mm (9·5 in)
Cooling system—Control and capacity	Bypass and thermostat, 11·9 litres (21 pints)
Electrical system	12 V lighting and starting
Engine—Type Displacement Bore and stroke Installed power Installed torque Compression ratio Governed speed	Four cylinder in-line petrol 1981 cm³ (120 in³) 91·7×75 mm (3·59×2·95 in) 54 kW (72·5 bhp) at 4300 rpm 145 Nm (107 lbf ft) at 2250 rpm 8·15:1 —
Frame—Type Material and dimensions	Ladder REFER TO SECTION 'CHASSIS'
Fuel tank—Capacity	85 litres (18.6 gallons)
Springs, front Capacity/design load Dimensions and rates Shock absorbers	Semi-elliptic 8044 N (1810 lbf) REFER TO SECTION 'CHASSIS' Hydraulic telescopic
Springs, rear Capacity/design load Dimensions, rates, etc	Semi-elliptic 9418 N (219 lbf) REFER TO SECTION 'CHASSIS'
Steering—Type Ratio Turning circle	Recirculating ball 24·72:1 323 cm WB—13·34 m (43·76 ft) 366 cm WB—15·06 m (49·41 ft) 404 cm WB—16·58 m (54·39 ft)
Transmission—Type Number of forward speeds Ratios	Synchromesh Four REFER TO SECTION 'POWER UNITS'
Tyres—Size	7.00R 16 12 PR radial
Wheels—Type Rim size Number of studs and size	Two piece 5·50 F×16 Single rear Six, 18 mm
Wheelbases	322·6 cm (127 in) 365·8 cm (144 in) 403·9 cm (159 in)

WHEEL AND TYRE EQUIPMENT AVAILABILITY

Tyre equipment	Wheel equipment	Availability	Plated front axle weight		Plated rear axle weight		Plated GVW	
			kg	tons	kg	tons	kg	tons
7.00R 16 12 PR radial Single rear	5.50 Fx 16	Standard	1800	1.77	2200	2.17	3500	3.44
8 R 17.5 C Single rear	5.25 x 17.5	Optional	1800	1.77	2200	2.17	3500	3.44

OPTIONAL EXTRA EQUIPMENT

Dual passenger seat trimmed to Comfort Pack standard (with 4-cyl engines only)
Oil pressure gauge
Voltmeter
Two-man tachograph
Tubeless tyres
Heavy duty batteries (U1 and Z2 engines only)
Power steering (later introduction)
Sliding load compartment door (van models only)
Load compartment bulkhead, full width (van models only)
Protective load floor covering (van models only) (Late introduction)
Rear door glazing (van models only)
Body protection strips (van models only) (Late introduction)
Translucent fibreglass roof panel (van models only)
Wide rear step (van models only)

WEIGHT DATA (APPROX)—STANDARD MODELS

Model	Wheelbase		Plated axle weights				Plated GVW		Kerb weight (approx) (1)		Body and payload allowance (1)	
			Front		Rear				Total			
	cm	in	kg	tons	kg	tons	kg	tons	kg	lb	kg	lb
Drive-away front end	322·6	127	1800	1·77	2200	2·17	3500	3·44	1603	3533	1897	4182
Drive-away front end	365·8	144	1800	1·77	2200	2·17	3500	3·44	1649	3635	1851	4080
Drive-away front end	403·9	159	1800	1·77	2200	2·17	3500	3·44	1675	3692	1825	4023
Chassis/cab	322·6	127	1800	1·77	2200	2·17	3500	3·44	1749	3855	1751	3860
Chassis/cab	365·8	144	1800	1·77	2200	2·17	3500	3·44	1795	3957	1705	3758
Chassis/cab	403·9	159	1800	1·77	2200	2·17	3500	3·44	1821	4014	1679	3701
Van	322·6	127	1800	1·77	2200	2·17	3500	3·44	2268	5000	1232	2716
Van	365·8	144	1800	1·77	2200	2·17	3500	3·44	2447	5395	1053	2321

Kerb weights include fuel, oil, water and tool kit. Taxation weights exclude these items.
(1) Subject to a 2½% variation to allow for production tolerances.

DRIVELINE COMBINATIONS

Model	Engine and Code	Gearbox	Rear axle and Code	Ratios
S 35	1981 cm³ four cylinder petrol (L3)	Four speed	Single speed 2540 kg capacity	5·57:1
		Five speed	(AX1)	5·57:1
	3685 cm³ six cylinder petrol (M2)	Four speed	Single speed 4080 kg capacity	4·273:1 4·875:1
		Five speed	(AX6)	4·273:1 4·875:1
	3867 cm³ four cylinder diesel (U1)	Four speed	Single speed 4080 kg capacity	3·538:1 4·273:1
		Five speed	(AX6)	3·538:1 4·273:1
	4052 cm³ six cylinder diesel (Z2)	Four speed	Single speed 4080 kg capacity	4·273:1 4·875:1
		Five speed	(AX6)	4·273:1 4·875:1

ENGINE AVAILABILITY

Engine and Code	Bore and Stroke	Capacity & Comp R	Installed power Installed torque	Governed Speed	Clutch
Four cylinder in-line petrol (Std) (L3) (1)	91·7×75 mm (3·59×2·95 in)	1981 cm³ (120 in²) 8·51:1	54 kW (72·5 bhp) at 4300 rpm 145 Nm (107 lbf ft) at 2250 rpm	NA	240 mm (9·5 in) dia SDP D/Spring Hydraulic
Six cylinder in-line petrol (Opt) (M2) (1) (2)	86·36×104·77 mm (3·4×4·125 in)	3685 cm³ (225 in³) 7·11:1	65·5 kW (88 bhp) at 3200 rpm 218 Nm (161 lbf ft) at 1600 rpm	NA	280 mm (11·0 in) dia SDP D/Spring Hydraulic
Four cylinder in-line diesel (Opt) (U1)	98·4×127 mm (3·875×5·0 in)	3867 cm³ (236 in³) 16:1	54·2 kW (72·6 bhp) at 2800 rpm 246 Nm (182·1 lbf ft) at 1400 rpm	2800 rpm	280 mm (11·0 in) dia SDP D/Spring Hydraulic
Six cylinder in-line diesel (Opt) (Z2)	92·0×101·6 mm (3·622×4·0 in)	4052 cm³ (247 in³) 21:1	69·7 kW (93·5 bhp) at 3600 rpm 219 Nm (162 lbf ft) at 2500 rpm	3600 rpm	280 mm (11·0 in) dia SDP D/Spring Hydraulic

(1) Electronic ignition.
(2) Automatic choke.

CHASSIS CAB KERB WEIGHTS—MODEL S 35

Vehicle Code	W/B	Front axle		Rear axle		Total	
	cm	kg	lb	kg	lb	kg	lb
RB 35A L3 FN2	323	1111	2449	638	1406	1749	3855
	366	1143	2520	652	1437	1795	3957
	404	1169	2577	652	1437	1821	4014
RB 35A L3 FM2	323	1135	2502	641	1413	1776	3915
	366	1167	2573	655	1444	1822	4017
	404	1194	2632	654	1442	1848	4074
RB 35A U1 FN3	323	1307	2881	689	1519	1996	4400
	366	1340	2954	702	1548	2042	4502
	404	1367	3014	701	1545	2068	4559
RB 35A U1 FM3	323	1331	2934	692	1526	2023	4460
	366	1364	3007	705	1554	2069	4561
	404	1392	3069	703	1550	2095	4619
RB 35A M2 FN3	323	1244	2743	680	1499	1924	4242
	366	1277	2815	693	1528	1970	4343
	404	1302	2870	694	1530	1996	4400
RB 35A M2 FM3	323	1268	2795	683	1506	1951	4301
	366	1301	2868	696	1534	1997	4402
	404	1327	2926	696	1534	2023	4460
RB 35A Z2 FN3	323	1331	2934	679	1497	2010	4431
	366	1364	3007	693	1528	2057	4535
	404	1391	3067	692	1526	2083	4593
RB 35A Z2 FM3	323	1355	2987	682	1504	2037	4491
	366	1388	3060	696	1534	2084	4594
	404	1416	3122	694	1530	2110	4652

VAN KERB WEIGHTS—MODEL S 35

Vehicle Code	W/B	Front axle		Rear axle		Total	
	cm	kg	lb	kg	lb	kg	lb
RB 35K L3 FN2	323	1235	2723	1033	2277	2268	5000
	366	1270	2800	1177	2595	2447	5395
RB 35K L3 FM2	323	1259	2775	1036	2284	2295	5059
	366	1294	2853	1180	2601	2474	5454
RB 35K U1 FN3	323	1431	3155	1084	2390	2515	5545
	366	1467	3234	1227	2705	2694	5939
RB 35K U1 FM3	323	1455	3208	1087	2396	2542	5604
	366	1491	3287	1230	2712	2721	5999
RB 35K M2 FN3	323	1368	3016	1075	2370	2443	5386
	366	1402	3091	1218	2685	2620	5776
RB 35K M2 FM3	323	1392	3069	1078	2376	2470	5445
	366	1426	3144	1221	2692	2647	5836
RB 35K Z2 FN3	323	1455	3208	1074	2368	2529	5576
	366	1491	3287	1218	2685	2709	5972
RB 35K Z2 FM3	323	1479	3261	1077	2374	2556	5635
	366	1515	3340	1221	2692	2736	6032

All vehicle weights shown above include fuel (full tank), oil, water, tool kit, spare wheel and carrier.

WEIGHT ADDITIONS AND DEDUCTIONS FOR OPTIONAL FITMENTS—MODEL S 35

Fitment	W/B	Front axle		Rear axle		Total	
	cm	kg	lb	kg	lb	kg	lb
DAFE (glazed) standard cab	323	–102.0	–224.8	–44.0	–97.0	–146.0	–321.8
	366	–108.0	–238.0	–38.0	–83.7	–146.0	–321.8
	404	–111.0	–244.7	–35.0	–77.1	–146.0	–321.8
DAFE (glazed) cab with Comfort Pack	323	–111.0	–244.7	–46.0	–101.4	–157.0	–346.1
	366	–117.0	–257.9	–40.0	–88.2	–157.0	–346.1
	404	–120.0	–264.5	–37.0	–81.5	–157.0	–346.1
Cab with Comfort Pack	323	11.4	25.1	4.3	9.4	15.7	34.6
	366	11.9	26.2	3.8	8.3	15.7	34.6
	404	12.3	27.1	3.4	7.5	15.7	34.6
Dual passenger seat	323	1.9	4.2	0.7	1.5	2.6	5.7
	366	2.0	4.4	0.6	1.3	2.6	5.7
	404	2.1	4.6	0.5	1.1	2.6	5.7
Cooling to 49°C (L3 engine)	323	1.5	3.3	–0.2	–0.44	1.3	2.8
	366	1.5	3.3	–0.2	–0.44	1.3	2.8
	404	1.5	3.3	–0.2	–0.44	1.3	2.8
Rear underride protection	323	–5.5	–12.1	23.4	51.5	17.9	39.4
	366	–6.4	–14.1	24.3	53.5	17.9	39.4
	404	–6.7	–14.7	24.6	54.2	17.9	39.4
Power steering	323	23.8	52.4	–2.3	–5.0	21.5	47.4
	366	23.5	51.8	–2.0	–4.4	21.5	47.4
	404	23.3	51.3	–1.8	–3.9	21.5	47.4
8R 17.5 C tyres and wheels (5 wheels)	323	1.6	3.5	1.9	4.2	3.5	7.7
	366	1.7	3.7	1.8	3.9	3.5	7.7
	404	1.7	3.7	1.8	3.9	3.5	7.7
HD battery and carrier (Z2 engine only)	323	20.6	45.4	19.6	43.2	40.2	88.6
	366	22.7	50.0	17.5	38.5	40.2	88.6
	404	24.7	54.4	15.5	34.1	40.2	88.6
Cooling to 49°C (U1 and M2 engines)	323	1.9	4.2	–0.3	–0.6	1.6	3.5
	366	1.8	3.9	–0.2	–0.44	1.6	3.5
	404	1.8	3.9	–0.2	–0.44	1.6	3.5
DAFE with high windscreen (standard cab)	323	–83.0	–183.0	–43.0	–94.8	–126.0	–277.7
	366	–89.0	–196.2	–37.0	–81.5	–126.0	–277.7
	404	–91.0	–200.6	–35.0	–77.1	–126.0	–277.7
DAFE with high windscreen (cab with Comfort Pack)	323	–92.0	–202.8	–45.0	–99.2	–137.0	–302.0
	366	–98.0	–216.0	–39.0	–85.9	–137.0	–302.0
	404	–101.0	–222.6	–36.0	–79.3	–137.0	–302.0
Headlamp levelling	323	0.8	1.76	—	—	0.8	1.76
	366	0.8	1.76	—	—	0.8	1.76
	404	0.8	1.76	—	—	0.8	1.76
Sliding side load door (Vans)	323	6.3	13.9	7.9	17.4	14.2	31.3
	366	7.2	15.8	7.0	15.4	14.2	31.3
Glazed rear doors (Vans)	323	–2.2	–4.8	10.5	23.1	8.3	18.3
	366	–3.2	–7.0	11.5	25.3	8.3	18.3
Translucent fibreglass roof (Vans)	323	–3.2	–7.0	–13.1	–28.9	–16.3	–35.9
	366	–3.5	–7.7	–19.1	–42.1	–22.6	–49.8
Full-width bulkhead (Vans)	323	20.8	45.8	13.9	30.6	34.7	76.4
	366	22.5	49.6	12.2	26.9	34.7	76.4
Wide rear steps (Vans)	323	–1.8	–3.9	8.9	19.6	7.1	15.6
	366	–1.6	–3.5	8.7	19.1	7.1	15.6
Half-width bulkhead deletion (vans)	323	–11.6	–25.5	–7.8	–17.2	–19.4	–42.7
	366	–12.6	–27.7	–6.8	–15.0	–19.4	–42.7
Rear underride plus rear step (Vans) (Service fitment)	323	–6.2	–13.6	31.3	69.0	25.1	55.3
	366	–5.5	–12.1	30.6	67.4	25.1	55.3

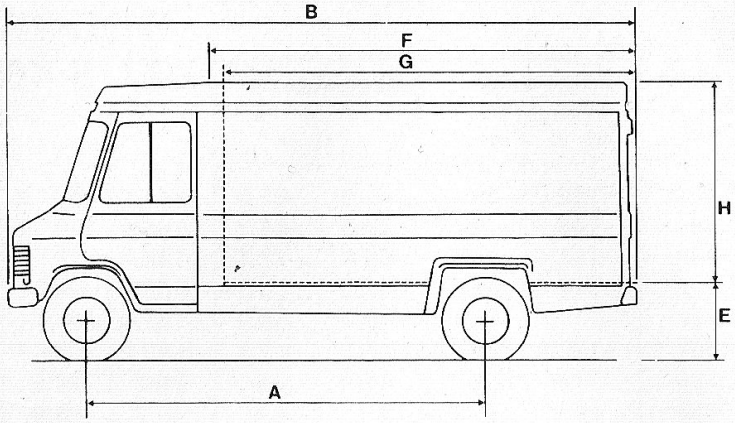

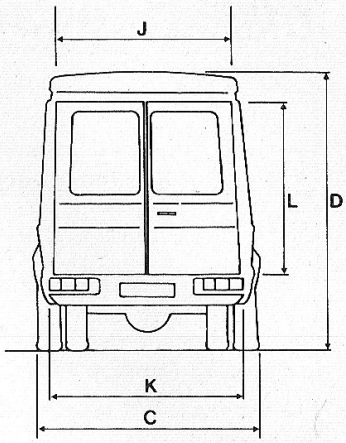

VANS

		mm	in	mm	in
A	Wheelbase	3226	127.0	3658	144.0
B	O/Length	4890	192.0	5880	231.0
C	O/Width	2000	79.0	2000	79.0
D	O/Height (unladen)	2570	100.0	2570	100.0
E	Load platform height (unladen)	700	27.0	700	27.0
F	Interior length without b/head	2870	113.0	3860	152.0
G	Interior length with b/head	2750	108.0	3740	147.0
H	Interior height	1870	73.0	1870	73.0
J	Load door aperture width (top)	1600	63.0	1600	63.0
K	Load door aperture width (bottom)	1650	65.0	1650	65.0
L	Load door aperture height	1580	62.0	1580	62.0
Load volume without b/head		9.8m³	350 ft³	13.2 m³	465 ft³
Load volume with b/head		9.4 m³	335 ft³	12.8 m³	450 ft³

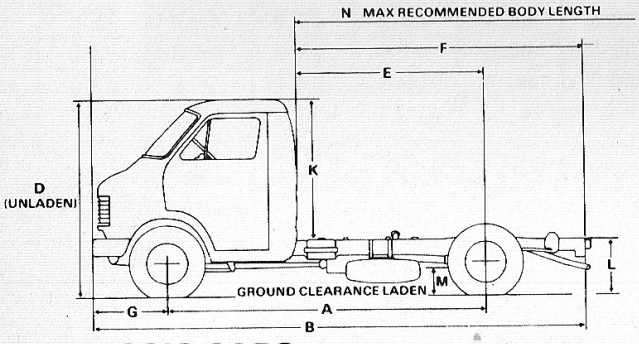

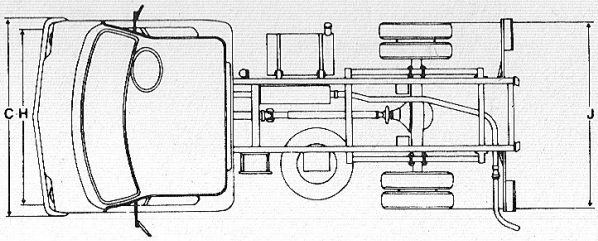

CHASSIS CABS

		mm	in	mm	in	mm	in
A	Wheelbase	3226	127.0	3658	144.0	4039	159.0
B	O/Length	5034.5	198.2	5796	228.18	6527.1	256.97
C	O/Width (at bumper)	2046.2	80.56	2046.2	80.56	2046.2	80.56
D	O/Height (unladen)	2102	82.77	2102	82.77	2102	82.77
E	Cab to rear axle	1904.7	74.98	2336.5	91.98	2717.2	106.97
F	Cab to end of frame	2920.7	114.98	3682.5	144.98	4413.2	173.74
G	Front overhang	740	29.12	740	29.12	740	29.12
H	Front track (1)	1735	68.32	1735	68.32	1735	68.32
J	Rear track (2)	1505	50.25	1505	50.25	1505	50.25
K	Frame to cab roof	1465.6	57.7	1465.6	57.7	1465.6	57.7
L	Frame height from ground (3)	677.5	26.67	677.5	26.67	677.5	26.67
M	Ground clearance (laden) (4)	182	7.16	182	7.16	182	7.16
N	Max rec body length	3000	118.0	3750	148.0	4500	177.0

(1) With tubed tyres—1745 mm (68·72 in) with tubeless tyres.

(2) Petrol engined models with tubed tyres—1515 mm (50·65 in) with tubeless tyres.
Diesel—1623 mm (63·3 in) tubed, 1633 mm (64·3 in) tubeless.

(3) Unladen.

(4) 186 mm (7.32 in) with tubeless tyres.

50 SERIES
PLATED GVW—4600 kg (4·53 tons)

DODGE MODEL S 46

Model availability and Wheelbase lengths	
Drive-away front end	322·6 cm (127 in)
Chassis/cab	365·8 cm (144 in)
	403·9 cm (159 in)
Van	322·6 cm (127 in)
Van	365·8 cm (144 in)

MINIMUM SPECIFICATION

Alternator	12 V 34 amp
Axle, front Capacity	Reverse Elliot 'T' beam 2300 kg (5072 lb)
Axle, rear Capacity and number of speeds Ratios	Spiral bevel 4080 kg (9000 lb) single speed REFER TO DRIVELINE COMBINATIONS PANEL
Battery—Capacity	12V 68 amp hr
Brakes, Service—Type Size—Front Rear Actuation Total lining area	2LS (Front) DS (Rear) 330·2×76·2 mm (13×3 in) 307·9×76·2 mm (12·125×3 in) Vacuum hydraulic, dual line with LS valve 1952 cm² (302·6 in²)
Secondary/Park brake Location Lining area	Mechanical Rear wheels 966 cm² (149·8 in²)
Cab	All steel semi forward control
Clutch—Type and actuation Size and lining area	Single dry plate, diaphragm spring, hydraulic 240 mm (9·5 in)
Cooling system—Control and capacity	Bypass and thermostat, 11·92 litres (21 pints)
Electrical system	12 V lighting and starting
Engine—Type Displacement Bore and stroke Installed power Installed torque Compression ratio Governed speed	Four cylinder in-line petrol 1981 cm³ (120 in³) 91·7×75 mm (3·59×2·95 in) 54 kW (72·5 bhp) at 4300 rpm 145 Nm (107 lbf ft) at 2250 rpm 8,15:1 —
Frame—Type Material and dimensions	Ladder REFER TO SECTION 'CHASSIS'
Fuel tank—Capacity	85 litres (18.6 gallons)
Springs, front Capacity/design load Dimensions and rates Shock absorbers	Semi-elliptic 8044 N (1810 lbf) REFER TO SECTION 'CHASSIS' Hydraulic telescopic
Springs, rear Capacity/design load Dimensions, rates, etc	Semi-elliptic 13832 N (3112 lbf) REFER TO SECTION 'CHASSIS'
Steering—Type Ratio Turning circle	Recirculating ball 24·72:1 323 cm WB—13·30 m (43·63 ft) 366 cm WB—15·02 m (49·28 ft) 404 cm WB—16·54 m (54·26 ft)
Transmission—Type Number of forward speeds Ratios	Synchromesh Four REFER TO SECTION 'POWER UNITS'
Tyres—Size	6.50R 16 10 PR radial
Wheels—Type Rim size Number of studs and size	Two piece 4·50 E×16 Twin rear Six, 18 mm
Wheelbases	322·6 cm (127 in) 365·8 cm (144 in) 403·9 cm (159 in)

WHEEL AND TYRE EQUIPMENT AVAILABILITY

Tyre equipment	Wheel equipment	Avail-ability	Plated front axle weight		Plated rear axle weight		Plated GVW	
			kg	tons	kg	tons	kg	tons
6.50 x 16 10 PR radial Twin rear	4.50 E x 16	Standard	1950	1.92	3200	3.15	4600	4.53
8R 17-5 C Twin rear	5.25 x 17.5	Optional	1950	1.92	3200	3.15	4600	4.53

OPTIONAL EXTRA EQUIPMENT

Dual passenger seat trimmed to Comfort Pack standard (with 4-cyl engines only)
Oil pressure gauge
Voltmeter
Two-man tachograph
Tubeless tyres
Heavy duty batteries (U1 and Z2 engines only)
Power steering (later introduction)
Sliding side loading door (van models only)
Load compartment bulkhead, full width (van models only)
Protective load floor covering (van models only) (Late introduction)
Rear door glazing (van models only)
Body protection strips (van models only) (Late introduction)
Translucent fibreglass roof panel (van models only)
Wide rear step (van models only)

WEIGHT DATA (APPROX)—STANDARD MODELS

Model	Wheelbase		Plated axle weights				Plated GVW		Kerb weight (approx) (1)		Body and payload allowance (1)	
			Front		Rear				Total			
	cm	in	kg	tons	kg	tons	kg	tons	kg	lb	kg	lb
Drive-away front end	322·6	127	1950	1·92	3200	3·15	4600	4·53	1719	3789	2881	6351
Drive-away front end	365·8	144	1950	1·92	3200	3·15	4600	4·53	1765	3891	2835	6250
Drive-away front end	403·9	159	1950	1·92	3200	3·15	4600	4·53	1790	3946	2810	6194
Chassis/cab	322·6	127	1950	1·92	3200	3·15	4600	4·53	1865	4111	2735	6029
Chassis/cab	365·8	144	1950	1·92	3200	3·15	4600	4·53	1911	4213	2689	5928
Chassis/cab	403·9	159	1950	1·92	3200	3·15	4600	4·53	1936	4268	2664	5873
Van	322·6	127	1950	1·92	3200	3·15	4600	4·53	2385	5258	2215	4883
Van	365·8	144	1950	1·92	3200	3·15	4600	4·53	2563	5650	2037	4490

Kerb weights include fuel, oil, water and tool kit. Taxation weights exclude these items.
(1) Subject to a 2½% variation to allow for production tolerances.

DRIVELINE COMBINATIONS

Model	Engine and Code	Gearbox	Rear axle and Code	Ratios
S 46	1981 cm³ four cylinder petrol (L3)	Four speed	Single speed 4080 kg capacity	5·43:1
		Five speed	(AX 6)	5·43:1
	3685 cm³ six cylinder petrol (M2)	Four speed	Single speed 4080 kg capacity	4·273:1 4·875:1
		Five speed	(AX6)	4·273:1 4·875:1
	3867 cm³ four cylinder diesel (U1)	Four speed	Single speed 4080 kg capacity	3·538:1 4·273:1
		Five speed	(AX6)	3·538:1 4·273:1
	4052 cm³ six cylinder diesel (Z2)	Four speed	Single speed 4080 kg capacity	4:273:1 4·875:1
		Five speed	(AX6)	4·273:1 4·875:1

ENGINE AVAILABILITY

Engine and Code	Bore and Stroke	Capacity & Comp R	Installed power Installed torque	Governed Speed	Clutch
Four cylinder in-line petrol (Std) (L3) (1)	91·7×75 mm (3·59×2·95 in)	1981 cm³ (120 in³) 8·15:1	54 kW (72·5 bhp) at 4300 rpm 145 Nm (107 lbf ft) at 2250 rpm	NA	240 mm (9·5 in) dia SDP D/Spring Hydraulic
Six cylinder in-line petrol (Opt) (M2) (1) (2)	86·36×104·77 mm (3·4×4·125 in)	3685 cm³ (225 in³) 7·11:1	65·5 kW (88 bhp) at 3200 rpm 218 Nm (161 lbf ft) at 1600 rpm	NA	280 mm (11·0 in) dia SDP D/Spring Hydraulic
Four-cylinder in-line diesel (Opt) (U1)	98·4×127 mm (3·875×5·0 in)	3867 cm³ (236 in³) 16:1	54·2 kW (72·6 bhp) at 2800 rpm 246 Nm (182·1 lbf ft) at 1400 rpm	2800 rpm	280 mm (11·0 in) dia SDP D/Spring Hydraulic
Six cylinder in-line diesel (Opt) (22)	92·0×101·6 mm (3·622×4·0 in)	4052 cm³ (247 in³) 21:1	69·7 kW (93·5 bhp) at 3600 rpm 219 Nm (162 lbf ft) at 2500 rpm	3600 rpm	280 mm (11·0 in) dia SDP D/Spring Hydraulic

(1) Electronic ignition.

(2) Automatic choke.

CHASSIS CAB KERB WEIGHTS—MODEL S 46

Vehicle Code	W/B	Front axle		Rear axle		Total	
	cm	kg	lb	kg	lb	kg	lb
RB 46A L3 FN2	323	1125	2480	740	1631	1865	4111
	366	1158	2553	753	1660	1911	4213
	404	1184	2610	752	1658	1936	4268
RB 46A L3 FM2	323	1149	2533	743	1638	1892	4171
	366	1182	2606	756	1667	1938	4273
	404	1209	2665	754	1662	1963	4327
RB 46A U1 FN2	323	1321	2912	751	1656	2072	4568
	366	1355	2987	763	1682	2118	4669
	404	1382	3047	761	1678	2143	4725
RB 46A U1 FM2	323	1345	2965	754	1662	2099	4627
	366	1379	3040	766	1689	2145	4729
	404	1407	3102	763	1682	2170	4784
RB 46A M2 FN3	323	1258	2773	742	1636	2000	4409
	366	1292	2848	754	1662	2046	4510
	404	1317	2903	754	1662	2071	4565
RB 46A M2 FM3	323	1282	2826	745	1642	2027	4468
	366	1316	2901	757	1669	2073	4570
	404	1342	2959	756	1667	2098	4626
RB 46A Z2 FN2	323	1345	2965	741	1634	2086	4599
	366	1379	3040	754	1662	2133	4702
	404	1406	3100	752	1658	2158	4758
RB 46A Z2 FM2	323	1369	3018	744	1640	2113	4658
	366	1403	3093	757	1669	2160	4762
	404	1431	3155	754	1662	2185	4817

VAN KERB WEIGHTS—MODEL S 46

Vehicle Code	W/B	Front axle		Rear axle		Total	
	cm	kg	lb	kg	lb	kg	lb
RB 46K L3 FN2	323	1254	2765	1131	2493	2385	5258
	366	1288	2840	1275	2810	2563	5650
RB 46K L3 FM2	323	1278	2817	1134	2500	2412	5317
	366	1312	2892	1278	2818	2590	5710
RB 46K U1 FN2	323	1450	3196	1142	2518	2592	5714
	366	1485	3274	1285	2833	2770	6107
RB 46K U1 FM2	323	1474	3250	1145	2524	2619	5774
	366	1509	3326	1288	2840	2797	6166
RB 46K M2 FN3	323	1387	3058	1133	2498	2520	5556
	366	1422	3135	1276	2813	2698	5948
RB 46K M2 FM3	323	1411	3111	1136	2504	2547	5615
	366	1446	3188	1279	2820	2725	6008
RB 46K Z2 FN2	323	1474	3250	1132	2495	2606	5745
	366	1509	3326	1289	2842	2798	6168
RB 46K Z2 FM3	323	1498	3302	1135	2502	2633	5804
	366	1533	3380	1292	2848	2825	6228

All vehicle weights shown above include fuel (full tank), oil, water, tool kit, spare wheel and carrier.

WEIGHT ADDITIONS AND DEDUCTIONS FOR OPTIONAL FITMENTS—MODEL S 46

Fitment	W/B	Front axle		Rear axle		Total	
	cm	kg	lb	kg	lb	kg	lb
DAFE (glazed) standard cab	323	–102.0	–224.8	–44.0	–97.0	–146.0	–321.8
	366	–108.0	–238.0	–38.0	–83.7	–146.0	–321.8
	404	–111.0	–244.7	–35.0	–77.1	–146.0	–321.8
DAFE (glazed) cab with Comfort Pack	323	–111.0	–244.7	–46.0	–101.4	–157.0	–346.1
	366	–117.0	–257.9	–40.0	–88.2	–157.0	–346.1
	404	–120.0	–264.5	–37.0	–81.5	–157.0	–346.1
Cab with Comfort Pack	323	11.4	25.1	4.3	9.4	15.7	34.6
	366	11.9	26.2	3.8	8.3	15.7	34.6
	404	12.3	27.1	3.4	7.5	15.7	34.6
Dual passenger seat	323	1.9	4.2	0.7	1.5	2.6	5.7
	366	2.0	4.4	0.6	1.3	2.6	5.7
	404	2.1	4.6	0.5	1.1	2.6	5.7
Cooling to 49°C (L3 engine)	323	1.5	3.3	–0.2	–0.44	1.3	2.8
	366	1.5	3.3	–0.2	–0.44	1.3	2.8
	404	1.5	3.3	–0.2	–0.44	1.3	2.8
Power steering	323	23.8	52.4	–2.3	–5.0	21.5	47.4
	366	23.5	51.8	–2.0	–4.4	21.5	47.4
	404	23.3	51.3	–1.8	–3.9	21.5	47.4
8R 17.5 C tyres and wheels (7 wheels)	323	14.2	31.3	28.5	62.8	42.7	94.1
	366	14.7	32.4	28.0	61.7	42.7	94.1
	404	15.0	33.0	27.7	61.0	42.7	94.1
HD battery and carrier (Z2 engine only)	323	20.6	45.4	19.6	43.2	40.2	88.6
	366	22.7	50.0	17.5	38.5	40.2	88.6
	404	24.7	54.4	15.5	34.1	40.2	88.6
Cooling to 49°C (U1 and M2 engines)	323	1.9	4.2	–0.3	–0.6	1.6	3.5
	366	1.8	3.9	–0.2	–0.44	1.6	3.5
	404	1.8	3.9	–0.2	–0.44	1.6	3.5
DAFE with high windscreen (standard cab)	323	–83.0	–183.0	–43.0	–94.8	–126.0	–277.7
	366	–89.0	–196.2	–37.0	–81.5	–126.0	–277.7
	404	–91.0	–200.6	–35.0	–77.1	–126.0	–277.7
DAFE with high windscreen (cab with Comfort Pack)	323	–92.0	–202.8	–45.0	–99.2	–137.0	–302.0
	366	–98.0	–216.0	–39.0	–85.9	–137.0	–302.0
	404	–101.0	–222.6	–36.0	–79.3	–137.0	–302.0
Headlamp levelling	323	0.8	1.76	—	—	0.8	1.76
	366	0.8	1.76	—	—	0.8	1.76
	404	0.8	1.76	—	—	0.8	1.76
Rear Underride protection	323	–6.0	–13.2	25.7	56.6	19.7	43.4
	366	–7.1	–15.6	26.8	59.0	19.7	43.4
	404	–7.4	–16.3	27.1	59.7	19.7	43.4
Sliding side load door (Vans)	323	6.3	13.9	7.9	17.4	14.2	31.3
	366	7.2	15.8	7.0	15.4	14.2	31.3
Glazed rear doors (Vans)	323	–2.2	–4.8	10.5	23.1	8.3	18.3
	366	–3.2	–7.0	11.5	25.3	8.3	18.3
Translucent fibreglass roof (Vans)	323	–3.2	–7.0	–13.1	–28.9	–16.3	–35.9
	366	–3.5	–7.7	–19.1	–42.1	–22.6	–49.8
Full-width bulkhead (Vans)	323	20.8	45.8	13.9	30.6	34.7	76.4
	366	22.5	49.6	12.2	26.9	34.7	76.4
Wide rear step (Vans)	323	–1.8	–3.9	8.9	19.6	7.1	15.6
	366	–1.6	–3.5	8.7	19.1	7.1	15.6
Half-width bulkhead deletion (vans)	323	–11.6	–25.5	–7.8	–17.2	–19.4	–42.7
	366	–12.6	–27.7	–6.8	–15.0	–19.4	–42.7
Rear underride plus rear step (Vans) (Service fitment)	323	–6.2	–13.6	31.3	69.0	25.1	55.3
	366	–5.5	–12.1	30.6	67.4	25.1	55.3

DIMENSIONS—50 SERIES

S 46

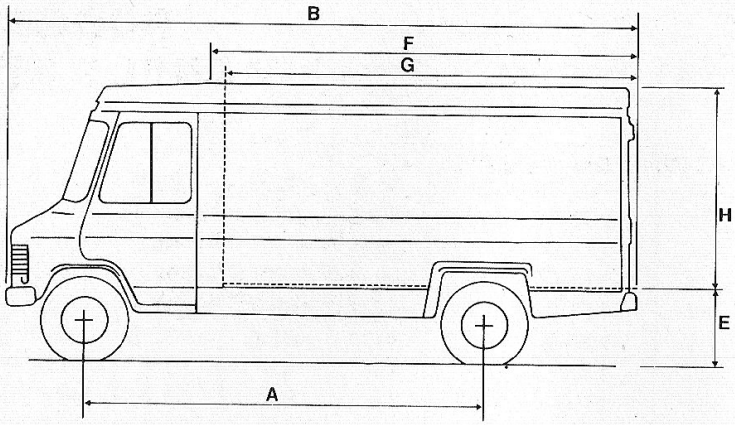

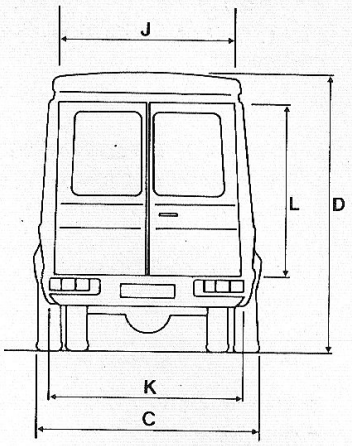

VANS

		mm	in	mm	in
A	Wheelbase	3226	127.0	3658	144.0
B	O/Length	4890	192.0	5880	231.0
C	O/Width	2040	80.0	2040	80.0
D	O/Height (unladen)	2570	100.0	2570	100.0
E	Load platform height (unladen)	700	27.0	700	27.0
F	Interior length without b/head	2870	113.0	3860	152.0
G	Interior length with b/head	2750	108.0	3740	147.0
H	Interior height	1870	73.0	1870	73.0
J	Load door aperture width (top)	1600	63.0	1600	63.0
K	Load door aperture width (bottom)	1650	65.0	1650	65.0
L	Load door aperture height	1580	62.0	1580	62.0
	Load volume without b/head	9.8m³	350 ft³	13.2 m³	465 ft³
	Load volume with b/head	9.4m³	335 ft³	12.8 m³	450 ft³

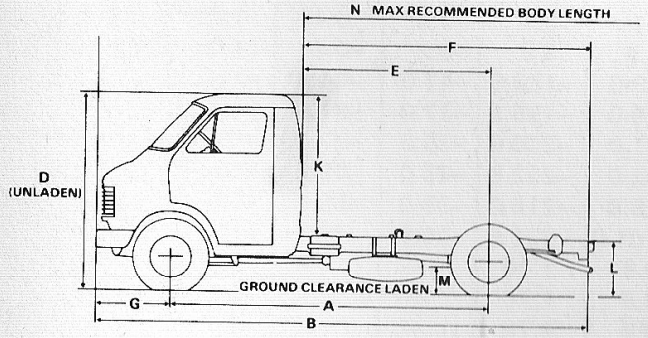

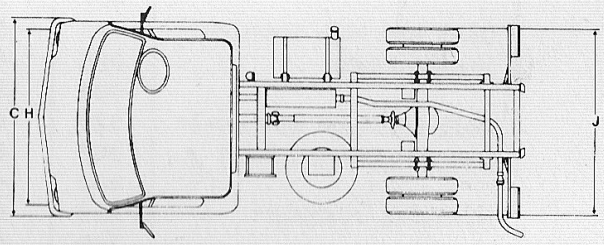

CHASSIS CABS

		mm	in	mm	in	mm	in
A	Wheelbase	3226	127.0	3658	144.0	4039	159.0
B	O/Length	5034.5	198.2	5796	228.18	6258.1	257.0
C	O/Width (at bumper)	2046.2	80.56	2046.2	80.56	2046.2	80.56
D	O/Height (unladen)	2081	81.93	2081	81.93	2081	81.93
E	Cab to rear axle	1904.7	74.98	2336.5	91.98	2717.2	106.97
F	Cab to end of frame	2920.7	114.98	3682.5	144.98	4413.2	173.74
G	Front overhang	740	29.12	740	29.12	740	29.12
H	Front track (1)	1709	67.32	1709	67.32	1709	67.32
J	Rear track (2)	1575	62.0	1575	62.0	1575	62.0
K	Frame to cab roof	1465.6	57.7	1465.6	57.7	1465.6	57.7
L	Frame height from ground (4)	656	25.82	656	25.82	656	25.82
M	Ground clearance (laden) (5)	167	6.57	167	6.57	167	6.57
N	Max rec body length	3000	118.0	3750	148.0	4500	177.0

(1) With tubed tyres—1688 mm (66·46 in) with tubeless tyres.
(2) With tubed tyres—1580 mm (62·2 in) with tubeless tyres.
(3) With tubed tyres—2102 mm (81·93 in) with tubeless tyres.
(4) With tubed tyres—677·5 mm (26·67 in) with tubeless tyres. Unladen
(5) With tubed tyres—186 mm (7·33 in) with tubeless tyres.

50 SERIES
PLATED GVW—5600 kg (5·51 tons)

DODGE MODEL S 56

Model availability and Wheelbase lengths	
Drive-away front end	322·6 cm (127 in)
Chassis/cab	365·8 cm (144 in)
	403·9 cm (159 in)
Van	322·6 cm (127 in)
Van	365·8 cm (144 in)

MINIMUM SPECIFICATION

Alternator	12 V 34 amp
Axle, front Capacity	Reverse Elliot 'I' beam 2300 kg (5072 lb)
Axle, rear Capacity and number of speeds Ratios	Spiral bevel 4080 kg (9000 lb) single speed REFER TO DRIVELINE COMBINATIONS PANEL
Battery—Capacity	12 V 128 amp hr
Brakes, Service—Type Size—Front Rear Actuation Total lining area	2LS (Front) DS (Rear) 330·2×76·2 mm (13×3 in) 307·9×76·2 mm (12·125×3 in) Vacuum hydraulic, dual line with LS valve 1952 cm² (302·6 in²)
Secondary/Park brake Location Lining area	Mechanical Rear wheels 966 cm² (149·7 in²)
Cab	All steel semi forward control
Clutch—Type and actuation Size and lining area	Single dry plate, diaphragm spring, hydraulic 280 mm (11 in)
Cooling system—Control and capacity	Bypass and thermostat, 16·47 litres (29 pints)
Electrical system	12 V lighting and starting
Engine—Type Displacement Bore and stroke Installed power Installed torque Compression ratio Governed speed	Four cylinder in-line diesel 3867 cm³ (236 in³) 98·4×127 mm (3·875×5·0 in) 54·2 kW (72·6 bhp) at 2800 rpm 246 Nm (182·1 lbf ft) at 1400 rpm 16:1 2800 rpm
Frame—Type Material and dimensions	Ladder REFER TO SECTION 'CHASSIS'
Fuel tank—Capacity	85 litres (18.6 gallons)
Springs, front Capacity/design load Dimensions and rates Shock absorbers	Semi-elliptic 9221 N (2075 lbf) REFER TO SECTION 'CHASSIS' Hydraulic telescopic
Springs, rear Capacity/design load Dimensions, rates, etc	Semi-elliptic 17560 N (3950 lbf) REFER TO SECTION 'CHASSIS'
Steering—Type Ratio Turning circle	Recirculating ball 24·72:1 323 cm WB—13·28 m (43·57 ft) 366 cm WB—15·00 m (49·21 ft) 404 cm WB—16·52 m (54·20 ft)
Transmission—Type Number of forward speeds Ratios	Synchromesh Four REFER TO SECTION 'POWER UNITS'
Tyres—Size	8R 17·5C
Wheels—Type Rim size Number of studs and size	Two piece 5·25×17·5 Twin rear Six, 18 mm
Wheelbases	322·6 cm (127 in) 365·8 cm (144 in) 403·9 cm (159 in)

WHEEL AND TYRE EQUIPMENT AVAILABILITY

Tyre equipment	Wheel equipment	Avail-ability	Plated front axle weight		Plated rear axle weight		Plated GVW	
			kg	tons	kg	tons	kg	tons
8R 17·5C Twin rear	5·25×17·5	Standard	2150	2·12	4000	3·94	5600	5·51
7.00R 16 12 PR radial Twin rear	5·50 F×16	Optional	2150	2·12	4000	3·94	5600	5·51

OPTIONAL EXTRA EQUIPMENT

Dual passenger seat trimmed to Comfort Pack standard (with 4-cyl engines only)
Oil pressure gauge
Voltmeter
Two-man tachograph
Tubed tyres
Heavy duty batteries (U1 and Z2 engines only)
Power steering (later introduction)
Sliding side loading door (van models only)
Load compartment bulkhead, full width (van models only)
Protective load floor covering (van models only) (Late introduction)
Rear door glazing (van models only)
Body protection strips (van models only) (Late introduction)
Translucent fibreglass roof panel (van models only)
Wide rear step (van models only)

WEIGHT DATA (APPROX) STANDARD MODELS

Model	Wheelbase		Plated axle weights				Plated GVW		Kerb weight (approx) (1)		Body and payload allowance (1)	
			Front		Rear				Total			
	cm	in	kg	tons	kg	tons	kg	tons	kg	lb	kg	lb
Drive-away front end	322·6	127	2150	2·12	4000	3·94	5600	5·51	2012	4435	2588	5705
Drive-away front end	365·8	144	2150	2·12	4000	3·94	5600	5·51	2034	4484	3566	7861
Drive-away front end	403·9	159	2150	2·12	4000	3·94	5600	5·51	2060	4541	3540	7804
Chassis/cab	322·6	127	2150	2·12	4000	3·94	5600	5·51	2158	4757	3442	7588
Chassis/cab	365·8	144	2150	2·12	4000	3·94	5600	5·51	2180	4806	3420	7539
Chassis/cab	403·9	159	2150	2·12	4000	3·94	5600	5·51	2206	4863	3394	7482
Van	322·6	127	2150	2·12	4000	3·94	5600	5·51	2676	5899	2924	6446
Van	365·8	144	2150	2·12	4000	3·94	5600	5·51	2832	6243	2768	6102

Kerb weights include fuel, oil, water and tool kit. Taxation weights exclude these items.
(2) Subject to a 2½% variation to allow for production tolerances.

DRIVELINE COMBINATIONS

Model	Engine and Code	Gearbox	Rear axle and Code	Ratios
S 56	3867 cm³ four cylinder diesel (U1)	Four speed	Single speed 4080 kg capacity	3·538:1 4·273:1
		Five speed	(AX6)	3·538:1 4·273:1
	3685 cm³ six cylinder petrol (M2)	Four speed	Single speed 4080 kg capacity	4·273:1 4·875:1
		Five speed	(AX6)	4·273:1 4·875:1
	4052 cm³ six cylinder diesel (Z2)	Four speed	Single speed 4080 kg capacity	4·273:1 4·875:1
		Five speed	(AX6)	4·273:1 4·875:1

ENGINE AVAILABILITY

Engine and Code	Bore and Stroke	Capacity & Comp R	Installed power Installed torque	Governed Speed	Clutch
Four cylinder in-line diesel (Std) (U1)	98·4×127 mm (3·875×5·0 in)	3867 cm³ (236 in³) 16:1	54·2 kW (72·6 bhp) at 2800 rpm 246 Nm (182·1 bhp) at 1400 rpm	2800 rpm	280 mm (11·0 in) dia SDP D/Spring Hydraulic
Six cylinder in-line petrol (Opt) (M2) (1) (2)	86·36×104·77 mm (3·4×4·125 in)	3685 cm³ (225 in³) 7·11:1	65·5 kW (88 bhp) at 3200 rpm 218 Nm (161 lbf ft) at 1600 rpm	NA	280 mm (11·0 in) dia SDP D/Spring Hydraulic
Six cylinder in-line diesel (Opt) (Z2)	92·0×101·6 mm (3·622×4·0 in)	4052 cm³ (247 in³) 21:1	69·7 kW (93·5 bhp) at 3600 rpm 219 Nm (162 lbf ft) at 2500 rpm	3600 rpm	280 mm (11·0 in) dia SDP D/Spring Hydraulic

(1) Electronic ignition.

(2) Automatic choke.

CHASSIS CAB KERB WEIGHTS — MODEL S56

Vehicle Code	W/B	Front axle		Rear axle		Total	
	cm	kg	lb	kg	lb	kg	lb
RB 56A U1 FN2	323	1350	2976	808	1781	2158	4757
	366	1387	3058	793	1748	2180	4806
	404	1410	3108	796	1755	2206	4863
RB 56A U1 FM2	323	1374	3029	811	1788	2185	4817
	366	1411	3111	796	1755	2207	4866
	404	1435	3164	798	1759	2233	4923
RB 56A M2 FN2	323	1287	2837	799	1761	2086	4598
	366	1324	2919	784	1728	2108	4647
	404	1345	2965	789	1739	2134	4704
RB 56A M2 FM2	323	1311	2890	802	1768	2113	4658
	366	1348	2972	787	1735	2135	4707
	404	1370	3020	791	1744	2161	4764
RB 56A Z2 FN2	323	1374	3029	798	1759	2172	4788
	366	1411	3111	784	1728	2195	4839
	404	1434	3161	787	1735	2221	4896
RB 56A Z2 FM2	323	1398	3082	801	1766	2199	4848
	366	1435	3164	787	1735	2222	4899
	404	1459	3217	789	1739	2248	4956

VAN KERB WEIGHTS — MODEL S56

Vehicle Code	W/B	Front axle		Rear axle		Total	
	cm	kg	lb	kg	lb	kg	lb
RB 56K U1 FN2	323	1496	3298	1180	2601	2676	5899
	366	1518	3346	1314	2897	2832	6243
RB 56K U1 FM2	323	1520	3351	1183	2608	2703	5959
	366	1542	3400	1317	2903	2859	6303
RB 56K M2 FN2	323	1433	3159	1171	2581	2604	5740
	366	1455	3207	1305	2877	2760	6084
RB 56K M2 FM2	323	1457	3212	1174	2588	2631	5800
	366	1479	3260	1308	2884	2787	6144
RB 56K Z2 FN2	323	1520	3351	1170	2579	2690	5930
	366	1542	3400	1305	2877	2847	6277
RB 56K Z2 FM2	323	1544	3404	1173	2586	2717	5990
	366	1566	3452	1308	2884	2874	6336

All vehicle weights shown above include fuel (full tank), oil, water, tool kit, spare wheel and carrier.

WEIGHT ADDITIONS AND DEDUCTIONS FOR OPTIONAL FITMENTS—MODEL S 56

Fitment	W/B	Front axle		Rear axle		Total	
	cm	kg	lb	kg	lb	kg	lb
DAFE (glazed) standard cab	323	–102.0	–224.8	–44.0	–97.0	–146.0	–321.8
	366	–108.0	–238.0	–38.0	–83.7	–146.0	–321.8
	404	–111.0	–244.7	–35.0	–77.1	–146.0	–321.8
DAFE (glazed) cab with Comfort Pack	323	–111.0	–244.7	–46.0	–101.4	–157.0	–346.1
	366	–117.0	–257.9	–40.0	–88.2	–157.0	–346.1
	404	–120.0	–264.5	–37.0	–81.5	–157.0	–346.1
Cab with Comfort Pack	323	11.4	25.1	4.3	9.4	15.7	34.6
	366	11.9	26.2	3.8	8.3	15.7	34.6
	404	12.3	27.1	3.4	7.5	15.7	34.6
Dual passenger seat	323	1.9	4.2	0.7	1.5	2.6	5.7
	366	2.0	4.4	0.6	1.3	2.6	5.7
	404	2.1	4.6	0.5	1.1	2.6	5.7
Power steering	323	23.8	52.4	–2.3	–5.0	21.5	47.4
	366	23.5	51.8	–2.0	–4.4	21.5	47.4
	404	23.3	51.3	–1.8	–3.9	21.5	47.4
HD battery and carrier (Z2 engine only)	323	20.6	45.4	19.6	43.2	40.2	88.6
	366	22.7	50.0	17.5	38.5	40.2	88.6
	404	24.7	54.4	15.5	34.1	40.2	88.6
Cooling to 49°C (U1 and M2 engines)	323	1.9	4.2	–0.3	–0.6	1.6	3.5
	366	1.8	3.9	–0.2	–0.44	1.6	3.5
	404	1.8	3.9	–0.2	–0.44	1.6	3.5
7.00R 16 tyres and wheels (7 wheels)	323	–3.7	–8.1	–7.5	–16.5	–11.2	–24.7
	366	–3.8	–8.3	–7.4	–16.3	–11.2	–24.7
	404	–3.9	–8.6	–7.3	–16.1	–11.2	–24.7
DAFE with high windscreen (standard cab)	323	–83.0	–183.0	–43.0	–94.8	–126.0	–277.7
	366	–89.0	–196.2	–37.0	–81.5	–126.0	–277.7
	404	–91.0	–200.6	–35.0	–77.1	–126.0	–277.7
DAFE with high windscreen (cab with Comfort Pack)	323	–92.0	–202.8	–45.0	–99.2	–137.0	–302.0
	366	–98.0	–216.0	–39.0	–85.9	–137.0	–302.0
	404	–101.0	–222.6	–36.0	–79.3	–137.0	–302.0
Rear underride protection	323	–6.0	–13.2	25.7	56.6	19.7	43.4
	366	–7.1	–15.6	26.8	59.0	19.7	43.4
	404	–7.4	–16.3	27.1	59.7	19.7	43.4
Headlamp levelling	323	0.8	1.76	—	—	0.8	1.76
	366	0.8	1.76	—	—	0.8	1.76
	404	0.8	1.76	—	—	0.8	1.76
Sliding side load door (Vans)	323	6.3	13.9	7.9	17.4	14.2	31.3
	366	7.2	15.8	7.0	15.4	14.2	31.3
Glazed rear doors (Vans)	323	–2.2	–4.8	10.5	23.1	8.3	18.3
	366	–3.2	–7.0	11.5	25.3	8.3	18.3
Translucent fibreglass roof (Vans)	323	–3.2	–7.0	–13.1	–28.9	–16.3	–35.9
	366	–3.5	–7.7	–19.1	–42.1	–22.6	–49.8
Full-width bulkhead (Vans)	323	20.8	45.8	13.9	30.6	34.7	76.4
	366	22.5	49.6	12.2	26.9	34.7	76.4
Wide rear step (Vans)	323	–1.8	–3.9	8.9	19.6	7.1	15.6
	366	–1.6	–3.5	8.7	19.1	7.1	15.6
Half-width bulkhead deletion (vans)	323	–11.6	–25.5	–7.8	–17.2	–19.4	–42.7
	366	–12.6	–27.7	–6.8	–15.0	–19.4	–42.7
Rear underride plus rear step (Vans) (Service fitment)	323	–6.2	–13.6	31.3	69.0	25.1	55.3
	366	–5.5	–12.1	30.6	67.4	25.1	55.3

VANS

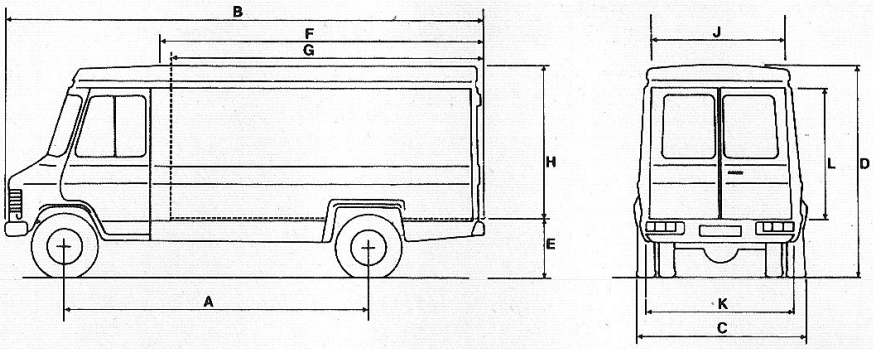

		mm	in	mm	in
A	Wheelbase	3226	127.0	3658	144.0
B	O/Length	4890	192.0	5880	231.0
C	O/Width	2040	80.0	2040	80.0
D	O/Height (unladen)	2570	100.0	2570	100.0
E	Load platform height (unladen)	700	27.0	700	27.0
F	Interior length without b/head	2870	113.0	3860	152.0
G	Interior length with b/head	2750	108.0	3740	147.0
H	Interior height	1870	73.0	1870	73.0
J	Load door aperture width (top)	1600	63.0	1600	63.0
K	Load door aperture width (bottom)	1650	65.0	1650	65.0
L	Load door aperture height	1580	62.0	1580	62.0
Load volume without b/head		9.8m³	350 ft³	13.2 m³	465 ft³
Load volume with b/head		9.4m³	335 ft³	12.8 m³	450 ft³

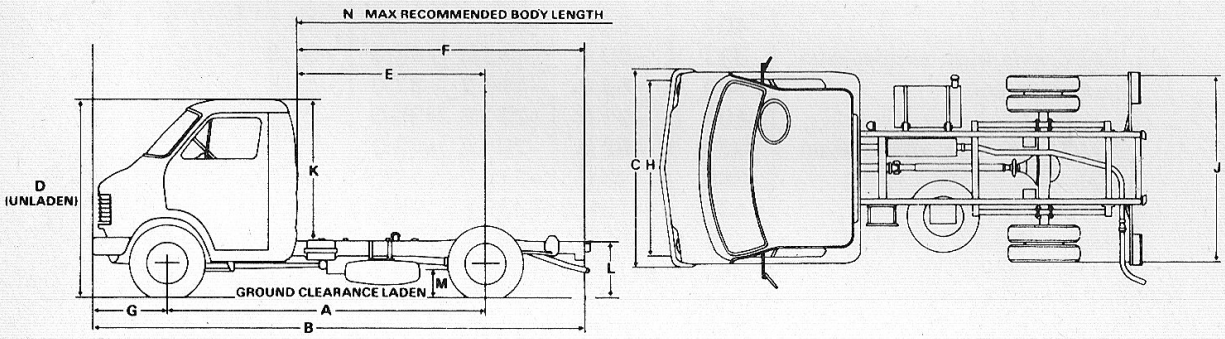

CHASSIS CABS

		mm	in	mm	in	mm	in
A	Wheelbase	3226	127.0	3658	144.0	4039	159.0
B	O/Length	5034.5	198.2	5796	228.18	6527.1	256.97
C	O/Width (at bumper)	2046.2	80.56	2046.2	80.56	2046.2	80.56
D	O/Height (unladen)	2097	82.55	2097	82.55	2097	82.55
E	Cab to rear axle	1904.7	74.98	2336.5	91.98	2717.2	106.97
F	Cab to end of frame	2920.7	114.98	3682.5	144.98	4413.2	173.74
G	Front overhang	740	29.12	740	29.12	740	29.12
H	Front track (1)	1688	66.46	1688	66.46	1688	66.46
J	Rear track (2)	1580	62.2	1580	62.2	1580	62.2
K	Frame to cab roof	1465.6	57.7	1465.6	57.7	1465.6	57.7
L	Frame height from ground (3)	679.6	26.76	679.6	26.76	679.6	26.76
M	Ground clearance (laden) (4)	186	7.33	186	7.73	186	7.33
N	Max rec body length	3000	118.0	3750	148.0	4500	177.0

(1) With tubeless tyres—1678 mm (66.06 in) with tubed tyres.
(2) With tubeless tyres—1575 mm (62.0 in) with tubed tyres.
(3) Unladen.
(4) 182 mm (7.16 in) with tubed tyres.

50 SERIES
PLATED GVW—6600 kg (6·50 tons)

DODGE MODEL S 66

Model availability and Wheelbase lengths	
Drive-away front end	322·6 cm (127 in)
Chassis/cab	365·8 cm (144 in)
	403·9 cm (159 in)
Van	322·6 cm (127 in)
Van	365·8 cm (144 in)

MINIMUM SPECIFICATION

Alternator	12 V 34 amp
Axle, front Capacity	Reverse Elliot I beam 2300 kg (5072 lb)
Axle, rear Capacity and number of speeds Ratios	Spiral bevel 5600 kg (12345 lb) single speed REFER TO DRIVELINE COMBINATIONS PANEL
Battery—Capacity	12 V 128 amp hr
Brakes, Service—Type Size—Front Rear Actuation Total lining area	2 LS (Front) DS (Rear) 330·2×76·2 mm (13×3 in) 307·9×101·6 mm (12·125×4 in) Vacuum hydraulic dual line with LS valve 2274 cm² (352·5 in²)
Secondary/Park brake Location Lining area	Mechanical Rear wheels 1288 cm² (199·6 in²)
Cab	All steel semi forward control
Clutch—Type and actuation Size and lining area	Single dry plate, diaphragm spring, hydraulic 280 mm (11 in)
Cooling system—Control and capacity	Bypass and thermostat, 16·47 litres (29 pints)
Electrical system	12 V lighting and starting
Engine—Type Displacement Bore and stroke Installed power Installed torque Compression ratio Governed speed	Four cylinder in-line diesel 3867 cm³ (236 in³) 98·4×127 mm (3·875×5·0 in) 54·2 kW (72·6 bhp) at 2800 rpm 246 Nm (182·1 lbf ft) at 1400 rpm 16:1 2800 rpm
Frame—Type Material and dimensions	Ladder REFER TO SECTION 'CHASSIS'
Fuel tank—Capacity	85 litres (18.6 gallons)
Springs, front Capacity/design load Dimensions and rates Shock absorbers	Semi-elliptic 9221 N (2075 lbf) REFER TO SECTION 'CHASSIS' Hydraulic telescopic
Springs, rear Capacity/design load Dimensions, rates, etc	Semi-elliptic 21288 N (4790 lbf) REFER TO SECTION 'CHASSIS'
Steering—Type Ratio Turning circle	Recirculating ball 24·72:1 323 cm WB—13·28 m (43·57 ft) 366 cm WB—15·00 m (49·21 ft) 404 cm WB—16·52 m (54·20 ft)
Transmission—Type Number of forward speeds Ratios	Synchromesh Four REFER TO SECTION 'POWER UNITS'
Tyres—Size	8R 17·5
Wheels—Type Rim size Number of studs and size	Two piece 5·25×17·5 Twin rear Six, 18 mm
Wheelbases	322·6 cm (127 in) 365·8 cm (144 in) 403·9 cm (159 in)

WHEEL AND TYRE EQUIPMENT AVAILABILITY

Tyre equipment	Wheel equipment	Avail-ability	Plated front axle weight		Plated rear axle weight		Plated GVW	
			kg	tons	kg	tons	kg	tons.
8R 17·5 Twin rear	5·25×17·5	Standard	2300	2·26	4900	4·82	6600	6·5
7.00R 16 12 PR radial Twin rear	5·50 F×16	Optional	2300	2·26	4900	4.82	6600	6·5

OPTIONAL EXTRA EQUIPMENT

Dual passenger seat trimmed to Comfort Pack standard (with 4-cyl engines only)
Oil pressure gauge
Voltmeter
Two-man tachograph
Tubed tyres
Heavy duty batteries (U1 and Z2 engines only)
Power steering (later introduction)
Sliding side load compartment door (van models only)
Load compartment bulkhead, full width (van models only)
Protective load floor covering (van models only) (Late introduction)
Rear door glazing (van models only)
Body protection strips (van models only) (Late introduction)
Translucent fibreglass roof panel (van models only)
Wide rear step (van models only)

WEIGHT DATA (APPROX)—STANDARD MODELS

Model	Wheelbase		Plated axle weights				Plated GVW		Kerb weight (approx) (1)		Body and payload allowance (1)	
			Front		Rear				Total			
	cm	in	kg	tons	kg	tons	kg	tons	kg	lb	kg	lb
Drive-away front end	322·6	127	2300	2·26	4900	4.82	6600	6·5	2067	4556	4533	9993
Drive-away front end	365·8	144	2300	2·26	4900	4.82	6600	6·5	2089	4605	4511	9944
Drive-away front end	403·9	159	2300	2·26	4900	4.82	6600	6·5	2115	4662	4485	9887
Chassis/cab	322·6	127	2300	2·26	4900	4.82	6600	6·5	2213	4878	4387	9671
Chassis/cab	365·8	144	2300	2·26	4900	4.82	6600	6·5	2235	4927	4365	9623
Chassis/cab	403·9	159	2300	2·26	4900	4.82	6600	6·5	2261	4984	4339	9565
Van	322·6	127	2300	2·26	4900	4.82	6600	6·5	2731	6020	3869	8529
Van	365·8	144	2300	2·26	4900	4.82	6600	6·5	2887	6364	3713	8185

Kerb weights include fuel, oil, water and tool kit. Taxation weights exclude these items.

(1) Subject to a 2½% variation to allow for production tolerances.

50 SERIES
PLATED GVW—6600 kg (6·50 tons)

DODGE MODEL S 66

Model availability and Wheelbase lengths	
Drive-away front end	322·6 cm (127 in)
Chassis/cab	365·8 cm (144 in)
	403·9 cm (159 in)
Van	322·6 cm (127 in)
Van	365·8 cm (144 in)

MINIMUM SPECIFICATION

Alternator	12 V 34 amp
Axle, front Capacity	Reverse Elliot I beam 2300 kg (5072 lb)
Axle, rear Capacity and number of speeds Ratios	Spiral bevel 5600 kg (12345 lb) single speed REFER TO DRIVELINE COMBINATIONS PANEL
Battery—Capacity	12 V 128 amp hr
Brakes, Service—Type Size—Front Rear Actuation Total lining area	2 LS (Front) DS (Rear) 330·2×76·2 mm (13×3 in) 307·9×101·6 mm (12·125×4 in) Vacuum hydraulic dual line with LS valve 2274 cm² (352·5 in²)
Secondary/Park brake Location Lining area	Mechanical Rear wheels 1288 cm² (199·6 in²)
Cab	All steel semi forward control
Clutch—Type and actuation Size and lining area	Single dry plate, diaphragm spring, hydraulic 280 mm (11 in)
Cooling system—Control and capacity	Bypass and thermostat, 16·47 litres (29 pints)
Electrical system	12 V lighting and starting
Engine—Type Displacement Bore and stroke Installed power Installed torque Compression ratio Governed speed	Four cylinder in-line diesel 3867 cm³ (236 in³) 98·4×127 mm (3·875×5·0 in) 54·2 kW (72·6 bhp) at 2800 rpm 246 Nm (182·1 lbf ft) at 1400 rpm 16:1 2800 rpm
Frame—Type Material and dimensions	Ladder REFER TO SECTION 'CHASSIS'
Fuel tank—Capacity	85 litres (18.6 gallons)
Springs, front Capacity/design load Dimensions and rates Shock absorbers	Semi-elliptic 9221 N (2075 lbf) REFER TO SECTION 'CHASSIS' Hydraulic telescopic
Springs, rear Capacity/design load Dimensions, rates, etc	Semi-elliptic 21288 N (4790 lbf) REFER TO SECTION 'CHASSIS'
Steering—Type Ratio Turning circle	Recirculating ball 24·72:1 323 cm WB—13·28 m (43·57 ft) 366 cm WB—15·00 m (49·21 ft) 404 cm WB—16·52 m (54·20 ft)
Transmission—Type Number of forward speeds Ratios	Synchromesh Four REFER TO SECTION 'POWER UNITS'
Tyres—Size	8R 17·5
Wheels—Type Rim size Number of studs and size	Two piece 5·25×17·5 Twin rear Six, 18 mm
Wheelbases	322·6 cm (127 in) 365·8 cm (144 in) 403·9 cm (159 in)

WHEEL AND TYRE EQUIPMENT AVAILABILITY

Tyre equipment	Wheel equipment	Avail-ability	Plated front axle weight		Plated rear axle weight		Plated GVW	
			kg	tons	kg	tons	kg	tons.
8R 17·5 Twin rear	5·25×17·5	Standard	2300	2·26	4900	4·82	6600	6·5
7.00R 16 12 PR radial Twin rear	5·50 F×16	Optional	2300	2·26	4900	4.82	6600	6·5

OPTIONAL EXTRA EQUIPMENT

Dual passenger seat trimmed to Comfort Pack standard (with 4-cyl engines only)
Oil pressure gauge
Voltmeter
Two-man tachograph
Tubed tyres
Heavy duty batteries (U1 and Z2 engines only)
Power steering (later introduction)
Sliding side load compartment door (van models only)
Load compartment bulkhead, full width (van models only)
Protective load floor covering (van models only) (Late introduction)
Rear door glazing (van models only)
Body protection strips (van models only) (Late introduction)
Translucent fibreglass roof panel (van models only)
Wide rear step (van models only)

WEIGHT DATA (APPROX)—STANDARD MODELS

Model	Wheelbase		Plated axle weights				Plated GVW		Kerb weight (approx) (1)		Body and payload allowance (1)	
			Front		Rear				Total			
	cm	in	kg	tons	kg	tons	kg	tons	kg	lb	kg	lb
Drive-away front end	322·6	127	2300	2·26	4900	4.82	6600	6·5	2067	4556	4533	9993
Drive-away front end	365·8	144	2300	2·26	4900	4.82	6600	6·5	2089	4605	4511	9944
Drive-away front end	403·9	159	2300	2·26	4900	4.82	6600	6·5	2115	4662	4485	9887
Chassis/cab	322·6	127	2300	2·26	4900	4.82	6600	6·5	2213	4878	4387	9671
Chassis/cab	365·8	144	2300	2·26	4900	4.82	6600	6·5	2235	4927	4365	9623
Chassis/cab	403·9	159	2300	2·26	4900	4.82	6600	6·5	2261	4984	4339	9565
Van	322·6	127	2300	2·26	4900	4.82	6600	6·5	2731	6020	3869	8529
Van	365·8	144	2300	2·26	4900	4.82	6600	6·5	2887	6364	3713	8185

Kerb weights include fuel, oil, water and tool kit. Taxation weights exclude these items.

(1) Subject to a 2½% variation to allow for production tolerances.

DRIVELINE COMBINATIONS

Model	Engine and Code	Gearbox	Rear axle and Code	Ratios
S 66	3867 cm³ four cylinder diesel (U1)	Four speed	Single speed 5600 kg capacity	4·273:1 4·875:1
		Five speed	(AX8)	4·273:1 4·875:1
	3685 cm³ six cylinder petrol (M2)	Four speed	Single speed 5600 kg capacity	4·875:1 5·43:1
		Five speed	(AX8)	4·875:1 5·43:1
	4052 cm³ six cylinder diesel (Z2)	Four speed	Single speed 5600 kg capacity	4·875:1 5·43:1
		Five speed	(AX8)	4·875:1 5·43:1

ENGINE AVAILABILITY

Engine and Code	Bore and Stroke	Capacity & Comp R	Installed power Installed torque	Governed Speed	Clutch
Four cylinder in-line diesel (Std) (U1)	98·4 × 127 mm (3·875 × 5·0 in)	3867 cm³ (236 in³) 16:1	54·2 kW (76·2 bhp) at 2800 rpm 246 Nm (182·1 lbf ft) at 1400 rpm	2800 rpm	280 mm (11·0 in) dia SDP D/Spring Hydraulic
Six cylinder in-line petrol (Opt) (M2) (1) (2)	86·36 × 104·77 mm (3·4 × 4·125 in	3685 cm³ (225 in³) 7·11:1	65·5 kW (88 bhp) at 3200 rpm 218 Nm (161 lbf ft) at 1600 rpm	NA	280 mm (11·0 in) dia SDP D/Spring Hydraulic
Six cylinder in-line diesel (Opt) (Z2)	92·0 × 101·6 mm (3·622 × 4·0 in)	4052 cm³ (247 in³) 21:1	69·7 kW (93·5 bhp) at 3600 rpm 219 Nm (162 lbf ft) at 2500 rpm	3600 rpm	280 mm (11·0 in) dia SDP D/Spring Hydraulic

(1) Electronic ignition.
(2) Automatic choke.

CHASSIS CAB KERB WEIGHTS — MODEL S66

Vehicle Code	W/B	Front axle		Rear axle		Total	
	cm	kg	lb	kg	lb	kg	lb
RB 66A U1 FN2	323	1360	2998	853	1880	2213	4878
	366	1385	3053	850	1874	2235	4927
	404	1414	3117	847	1867	2261	4984
RB 66A U1 FM2	323	1384	3051	856	1887	2240	4938
	366	1409	3106	853	1880	2262	4986
	404	1439	3172	849	1872	2288	5044
RB 66A M2 FN2	323	1297	2859	844	1861	2141	4720
	366	1322	2914	841	1854	2163	4768
	404	1349	2974	840	1851	2189	4825
RB 66A M2 FM2	323	1321	2912	847	1867	2168	4779
	366	1346	2967	844	1861	2190	4828
	404	1374	3029	842	1856	2216	4885
RB 66A Z2 FN2	323	1384	3051	843	1858	2227	4909
	366	1409	3106	841	1854	2250	4960
	404	1433	3159	838	1847	2271	5006
RB 66A Z2 FM2	323	1409	3106	846	1865	2255	4971
	366	1434	3161	844	1861	2278	5022
	404	1463	3225	840	1852	2303	5077

VAN KERB WEIGHTS — MODEL S66

Vehicle Code	W/B	Front axle		Rear axle		Total	
	cm	kg	lb	kg	lb	kg	lb
RB 66K U1 FN2	323	1497	3300	1234	2720	2731	6020
	366	1522	3355	1365	3009	2887	6364
RB 66K U1 FM2	323	1521	3353	1237	2727	2758	6080
	366	1546	3408	1368	3016	2914	6424
RB 66K M2 FN2	323	1434	3161	1225	2701	2659	5862
	366	1459	3217	1356	2989	2815	6206
RB 66K M2 FM2	323	1458	3214	1228	2707	2686	5921
	366	1483	3269	1359	2996	2842	6265
RB 66K Z2 FN2	323	1521	3353	1224	2698	2745	6051
	366	1546	3408	1356	2989	2902	6397
RB 66K Z2 FM2	323	1546	3408	1227	2705	2773	6113
	366	1571	3463	1359	2996	2930	6459

All vehicle weights shown above include fuel (full tank), oil, water, tool kit, spare wheel and carrier.

WEIGHT ADDITIONS AND DEDUCTIONS FOR OPTIONAL FITMENTS—MODEL S 66

Fitment	W/B	Front axle		Rear axle		Total	
	cm	kg	lb	kg	lb	kg	lb
DAFE (glazed) standard cab	323	–102.0	–224.8	–44.0	–97.0	–146.0	–321.8
	366	–108.0	–238.0	–38.0	–83.7	–146.0	–321.8
	404	–111.0	–244.7	–35.0	–77.1	–146.0	–321.8
DAFE (glazed) cab with Comfort Pack	323	–111.0	–244.7	–46.0	–101.4	–157.0	–346.1
	366	–117.0	–257.9	–40.0	–88.2	–157.0	–346.1
	404	–120.0	–264.5	–37.0	–81.5	–157.0	–346.1
Cab with Comfort Pack	323	11.4	25.1	4.3	9.4	15.7	34.6
	366	11.9	26.2	3.8	8.3	15.7	34.6
	404	12.3	27.1	3.4	7.5	15.7	34.6
Dual passenger seat	323	1.9	4.2	0.7	1.5	2.6	5.7
	366	2.0	4.4	0.6	1.3	2.6	5.7
	404	2.1	4.6	0.5	1.1	2.6	5.7
Power steering	323	23.8	52.4	–2.3	–5.0	21.5	47.4
	366	23.5	51.8	–2.0	–4.4	21.5	47.4
	404	23.3	51.3	–1.8	–3.9	21.5	47.4
HD battery and carrier (Z2 engine only)	323	20.6	45.4	19.6	43.2	40.2	88.6
	366	22.7	50.0	17.5	38.5	40.2	88.6
	404	24.7	54.4	15.5	34.1	40.2	88.6
Cooling to 49°C (U1 and M2 engines)	323	1.9	4.2	–0.3	–0.6	1.6	3.5
	366	1.8	3.9	–0.2	–0.44	1.6	3.5
	404	1.8	3.9	–0.2	–0.44	1.6	3.5
7.00R 16 tyres and wheels (7 wheels)	323	–3.7	–8.1	–7.5	–16.5	–11.2	–24.7
	366	–3.8	–8.3	–7.4	–16.3	–11.2	–24.7
	404	–3.9	–8.6	–7.3	–16.1	–11.2	–24.7
DAFE with high windscreen (standard cab)	323	–83.0	–183.0	–43.0	–94.8	–126.0	–277.7
	366	–89.0	–196.2	–37.0	–81.5	–126.0	–277.7
	404	–91.0	–200.6	–35.0	–77.1	–126.0	–277.7
DAFE with high windscreen (cab with Comfort Pack)	323	–92.0	–202.8	–45.0	–99.2	–137.0	–302.0
	366	–98.0	–216.0	–39.0	–85.9	–137.0	–302.0
	404	–101.0	–222.6	–36.0	–79.3	–137.0	–302.0
Rear underride protection	323	–6.0	–13.2	25.7	56.6	19.7	43.4
	366	–7.1	–15.6	26.8	59.0	19.7	43.4
	404	–7.4	–16.3	27.1	59.7	19.7	43.4
Headlamp levelling	323	0.8	1.76	—	—	0.8	1.76
	366	0.8	1.76	—	—	0.8	1.76
	404	0.8	1.76	—	—	0.8	1.76
Sliding side load door (Vans)	323	6.3	13.9	7.9	17.4	14.2	31.3
	366	7.2	15.8	7.0	15.4	14.2	31.3
Glazed rear doors (Vans)	323	–2.2	–4.8	10.5	23.1	8.3	18.3
	366	–3.2	–7.0	11.5	25.3	8.3	18.3
Translucent fibreglass roof (Vans)	323	–3.2	–7.0	–13.1	–28.9	–16.3	–35.9
	366	–3.5	–7.7	–19.1	–42.1	–22.6	–49.8
Full-width bulkhead (Vans)	323	20.8	45.8	13.9	30.6	34.7	76.4
	366	22.5	49.6	12.2	26.9	34.7	76.4
Wide rear step (Vans)	323	–1.8	–3.9	8.9	19.6	7.1	15.6
	366	–1.6	–3.5	8.7	19.1	7.1	15.6
Half-width bulkhead deletion (vans)	323	–11.6	–25.5	–7.8	–17.2	–19.4	–42.7
	366	–12.6	–27.7	–6.8	–15.0	–19.4	–42.7
Rear underride plus rear step (Vans) (Service fitment)	323	–6.2	–13.6	31.3	69.0	25.1	55.3
	366	–5.5	–12.1	30.6	67.4	25.1	55.3

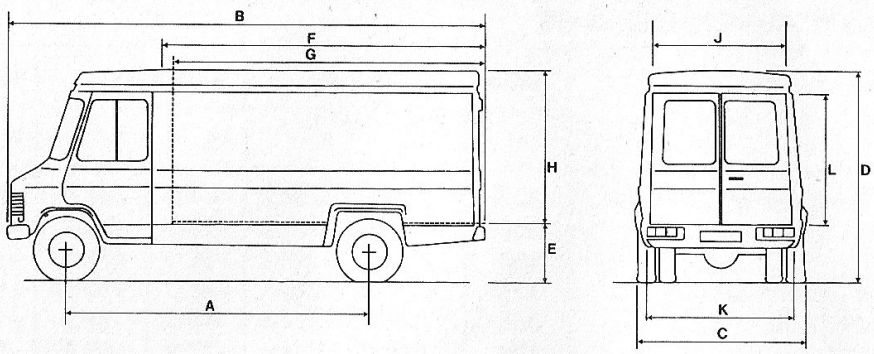

VANS

		mm	in	mm	in
A	Wheelbase	3226	127.0	3658	144.0
B	O/Length	4890	192.0	5880	231.0
C	O/Width	2040	80.0	2040	80.0
D	O/Height (unladen)	2570	100.0	2570	100.0
E	Load platform height (unladen)	700	27.0	700	27.0
F	Interior length without b/head	2870	113.0	3860	152.0
G	Interior length with b/head	2750	108.0	3740	147.0
H	Interior height	1870	73.0	1870	73.0
J	Load door aperture width (top)	1600	63.0	1600	63.0
K	Load door aperture width (bottom)	1650	65.0	1650	65.0
L	Load door aperture height	1580	62.0	1580	62.0
Load volume without b/head		9.8m³	350 ft³	13.2 m³	465 ft³
Load volume with b/head		9.4m³	335 ft³	12.8 m³	450 ft³

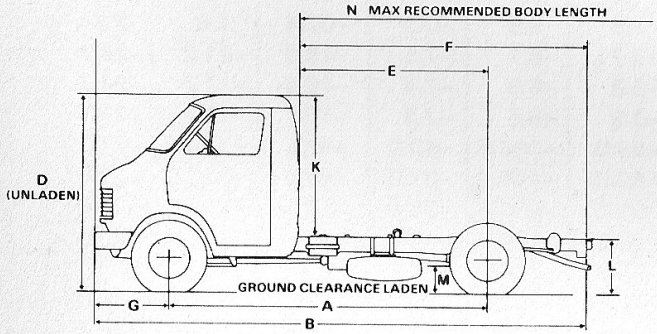

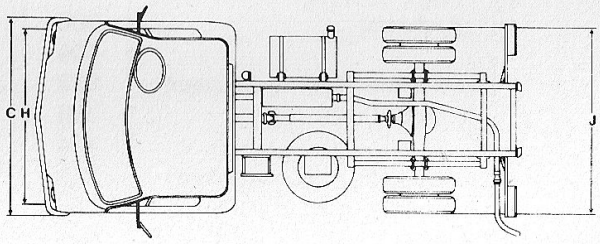

CHASSIS CABS

		mm	in	mm	in	mm	in
A	Wheelbase	3226	127.0	3658	144.0	4039	159.0
B	O/Length	5034.5	198.2	5796	228.18	6259	257
C	O/Width (at bumper)	2046.2	80.56	2046.2	80.56	2046.2	80.56
D	O/Height (unladen)	2097	82.55	2097	82.55	2097	82.55
E	Cab to rear axle	1904.7	74.98	2336.5	91.98	2717.2	106.97
F	Cab to end of frame	2920.7	114.98	3682.5	144.98	4413.2	173.74
G	Front overhang	740	29.12	740	29.12	740	29.12
H	Front track (1)	1688	66.46	1688	66.46	1688	66.46
J	Rear track (2)	1575.6	62.03	1575.6	62.03	1575.6	62.03
K	Frame to cab roof	1465.6	57.7	1465.6	57.7	1465.6	57.7
L	Frame height from ground (3)	682	26.86	682	26.86	682	26.86
M	Ground clearance (laden) (4)	175.8	6.92	175.8	6.92	175.8	6.92
N	Max rec body length	3000	118.0	3750	148.0	4500	177.0

(1) With tubeless tyres—1678 mm (66.06 in) with tubed tyres.
(2) With tubeless tyres—1570 mm (61.83 in) with tubed tyres.
(3) Unladen.
(4) 171 mm (6.73 in) with tubed tyres.

50 SERIES
PLATED GVW—7500 kg (7.38 tons)

DODGE
MODEL S 75

Model availability and wheel base lengths	
Drive-away front end	322.6 cm (127 in)
Chassis/cab	365.8 cm (144 in)
	403.9 cm (159 in)
Van	322.6 cm (127 in)
Van	365.8 cm (144 in)

MINIMUM SPECIFICATION

Alternator	12 V 34 amp
Axle, front Capacity	Reverse Elliot 'I' beam 2500 kg (5510 lb)
Axle, rear Capacity and number of speeds Ratios	Spiral bevel 5700 kg (12566 lb) single speed REFER TO DRIVELINE COMBINATIONS PANEL
Battery—Capacity	12 V 128 amp hr
Brakes, Service—Type Size – Front Rear Actuation Total lining area	2 LS (Front) Duo Servo (Rear) 330 x 102 mm (13.0 x 4.0 in) 330 x 140 mm (13.0 x 5.5 in) Air-hydraulic dual line 3180 cm² (493 in²)
Secondary/Park brake Location Lining area	Spring type Rear wheels 1892 cm² (293.3 in²)
Cab	All steel semi forward control
Clutch—Type and actuation Size and lining area	Single dry plate diaphragm spring, hydraulic 280 mm (11 in)
Cooling system—Control and capacity	Bypass and thermostat, 16.47 litres (29 pints)
Electrical system	12 V lighting and starting
Engine—Type Displacement Bore and stroke Installed power Installed torque Compression ratio Governed speed	Four-cylinder in-line diesel 3.86 litres (236 in³) 98.4 x 127 mm (3.875 x 5.0 in) 53.97 kW (72.3 bhp) at 2800 rpm 248 Nm (182.9 lbf ft) at 1400 rpm 16:1 2800 rpm
Frame—Type Materials and dimensions	Ladder REFER TO SECTION 'CHASSIS'
Fuel tank—Capacity	85 litres (18.6 gallons)
Springs, front Capacity/design load Dimensions and rates Shock absorbers	Semi-elliptic 10850N (2438 lbf) REFER TO SECTION 'CHASSIS' Hydraulic telescopic
Springs, rear Capacity/design load Dimensions, rates, etc	Semi-elliptic 24829N (5580 lbf) REFER TO SECTION 'CHASSIS'
Steering—Type Ratio Turning circle	Recirculating ball 24.72:1 323 cm WB—13.34 m (43.76 ft) 366 cm WB—15.06 m (49.41 ft) 404 cm WB—16.58 m (54.39 ft)
Transmission—Type Number of forward speeds Ratios	Synchromesh Four REFER TO SECTION 'POWER UNITS'
Tyres—Size	8.5R 17.5
Wheels—Type Rim size Number of studs and size	One piece 5.25 x 17.5—4.60 Twin rear Six 18 mm
Wheelbases	322.6 cm (127 in) 365.8 cm (144 in) 403.9 cm (159 in)

OPTIONAL EXTRA EQUIPMENT

Dual passenger seat trimmed to Comfort Pack standard (with U1 engine only)
Oil pressure gauge
Voltmeter
Manually operated headlamp levellers
RH dip white or yellow headlamps
Tubed tyres
Heavy duty batteries
Power steering
Sliding side load compartment door (van models only)
Load compartment bulkhead, full (van models only)
Protective load floor covering (van models only)
Rear door glazing (van models only)
Wider nearside door entrance steps (van models only)
Body protection strips (van models only)
Translucent fibreglass roof panel (van models only)

WEIGHT DATA (APPROX) STANDARD MODELS

Model	Wheelbase		Plated axle weights				Plated GVW		Kerb weight (approx) (1)		Body and payload allowance (1)	
			Front		Rear				Total			
	cm	in	kg	tons	kg	tons	kg	tons	kg	lb	kg	lb
Drive-away front end	322.6	127	2500	2.46	5600	5.51	7500	7.38	2232	4920	5268	11613
Drive-away front end	365.8	144	2500	2.46	5600	5.51	7500	7.38	2253	4966	5247	11567
Drive-away front end	403.9	159	2500	2.46	5600	5.51	7500	7.38	2275	5015	5225	11519
Chassis/cab	322.6	127	2500	2.46	5600	5.51	7500	7.38	2378	5242	5122	11291
Chassis/cab	365.8	144	2500	2.46	5600	5.51	7500	7.38	2399	5289	5101	11245
Chassis/cab	403.9	159	2500	2.46	5600	5.51	7500	7.38	2421	5338	5079	11197
Van	322.6	127	2500	2.46	5600	5.51	7500	7.38	2898	6389	4602	10145
Van	365.8	144	2500	2.46	5600	5.51	7500	7.38	3051	6726	4449	9808

Kerb weights include fuel, oil, water and tool kit. Taxation weights exclude these items
(1) Subject to a 2½% variation to allow for production tolerances

DRIVELINE COMBINATIONS

Model	Engine and Code	Gearbox	Rear axle and Code	Ratios
S 75	3867 cm³ four cylinder diesel (U1)	Four speed	Single speed 5700 kg capacity	4.273
		Five speed	(AX 9)	4.273
	4052 cm³ six cylinder diesel (Z2)	Four speed	Single speed 5700 kg capacity	5.43
		Five speed	(AX 9)	5.43

ENGINE AVAILABILITY

Engine and Code	Bore and Stroke	Capacity & Comp. R	Installed power Installed torque	Governed Speed	Clutch
Four cylinder in-line diesel (Std)(U1)	98.4 x 127 mm (3.875 x 5.0 in)	3867 cm³ (236 in³) 16:1	53.97 kW (72.3 bhp) at 2800 rpm 248 Nm (182.9 lbf ft) at 1400 rpm	2800 rpm	280 mm (11.0 in) dia. SDP D/Spring Hydraulic
Six cylinder in-line diesel (Opt) (Z2)	92.0 x 101.6 mm (3.622 x 4.0 in)	4052 cm³ (247 in³) 21:1	69.29 kW (92.9 bhp) at 3600 rpm 219.3 Nm (161.7 lbf ft) at 2500 rpm	3600 rpm	280 mm (11.0 in) dia. SDP D/Spring Hydraulic

WHEEL AND TYRE EQUIPMENT AVAILABILITY

Tyre equipment	Wheel equipment	Avail-ability	Plated front axle weight		Plated rear axle weight		Plated GVW	
			kg	tons	kg	tons	kg	tons
8.5R 17.5 Twin rear	5.25 x 17.5	Standard	2500	2.46	5600	5.51	7500	7.38
7.50R 16 12 PR Twin rear	6.00G x 16	Optional	2500	2.46	5600	5.51	7500	7.38

CHASSIS CAB KERB WEIGHTS — MODEL S75

Vehicle Code	W/B	Front axle		Rear axle		Total	
	cm	kg	lb	kg	lb	kg	lb
RB 75A U1 FN2	323	1429	3150	949	2092	2378	5242
	366	1440	3175	959	2114	2399	5289
	404	1454	3206	967	2132	2421	5338
RB 75A U1 FM2	323	1453	3203	952	2099	2405	5302
	366	1464	3228	962	2121	2426	5349
	404	1479	3261	969	2136	2448	5397
RB 75A Z2 FN2	323	1453	3203	939	2070	2392	5273
	366	1464	3228	950	2094	2414	5322
	404	1478	3258	958	2112	2436	5370
RB 75A Z2 FM2	323	1477	3256	942	2077	2419	5333
	366	1488	3280	953	2101	2441	5381
	404	1502	3311	945	2083	2447	5394

VAN KERB WEIGHTS — MODEL S75

Vehicle Code	W/B	Front axle		Rear axle		Total	
	cm	kg	lb	kg	lb	kg	lb
RB 75K U1 FN2	323	1567	3455	1331	2934	2898	6389
	366	1590	3505	1461	3221	3051	6726
RB 75K U1 FM2	323	1591	3507	1334	2941	2925	6448
	366	1614	3558	1464	3227	3078	6785
RB 75K Z2 FN2	323	1591	3507	1321	2912	2912	6419
	366	1614	3558	1452	3201	3066	6759
RB 75K Z2 FM2	323	1615	3560	1324	2919	2939	6479
	366	1638	3611	1455	3208	3093	6819

All vehicle weights shown above include fuel (full tank), oil, water, tool kit, spare wheel and carrier.

WEIGHT ADDITIONS AND DEDUCTIONS FOR OPTIONAL FITMENTS—MODEL S 75

Fitment	W/B	Front axle		Rear axle		Total	
	cm	kg	lb	kg	lb	kg	lb
DAFE (glazed) standard cab	323	–102.0	–224.8	–44.0	–97.0	–146.0	–321.8
	366	–108.0	–238.0	–38.0	–83.7	–146.0	–321.8
	404	–111.0	–244.7	–35.0	–77.1	–146.0	–321.8
DAFE (glazed) cab with	323	–111.0	–244.7	–46.0	–101.4	–157.0	–346.1
Comfort Pack	366	–117.0	–257.9	–40.0	–88.2	–157.0	–346.1
	404	–120.0	–264.5	–37.0	–81.5	–157.0	–346.1
Cab with Comfort Pack	323	11.4	25.1	4.3	9.4	15.7	34.6
	366	11.9	26.2	3.8	8.3	15.7	34.6
	404	12.3	27.1	3.4	7.5	15.7	34.6
Dual passenger seat	323	1.9	4.2	0.7	1.5	2.6	5.7
	366	2.0	4.4	0.6	1.3	2.6	5.7
	404	2.1	4.6	0.5	1.1	2.6	5.7
Power steering	323	23.8	52.4	–2.3	–5.0	21.5	47.4
	366	23.5	51.8	–2.0	–4.4	21.5	47.4
	404	23.3	51.3	–1.8	–3.9	21.5	47.4
7.50R 16 tyres and wheels	323	4.2	9.2	8.4	18.5	12.6	27.7
(7 wheels)	366	4.3	9.4	8.3	18.3	12.6	27.7
	404	4.4	9.7	8.2	18.0	12.6	27.7
HD battery and carrier	323	20.6	45.4	19.6	43.2	40.2	88.6
(Z2 engine only)	366	22.7	50.0	17.5	38.5	40.2	88.6
	404	24.7	54.4	15.5	34.1	40.2	88.6
Cooling to 49°C	323	1.9	4.2	–0.3	–0.6	1.6	3.5
(U1 engine only)	366	1.8	3.9	–0.2	–0.44	1.6	3.5
	404	1.8	3.9	–0.2	–0.44	1.6	3.5
DAFE with high windscreen	323	–83.0	–183.0	–43.0	–94.8	–126.0	–277.7
(standard cab)	366	–89.0	–196.2	–37.0	–81.5	–126.0	–277.7
	404	–91.0	–200.6	–35.0	–77.1	–126.0	–277.7
DAFE with high windscreen	323	–92.0	–202.8	–45.0	–99.2	–137.0	–302.0
(cab with Comfort Pack)	366	–98.0	–216.0	–39.0	–85.9	–137.0	–302.0
	404	–101.0	–222.6	–36.0	–79.3	–137.0	–302.0
Rear underride protection	323	–6.0	–13.2	25.7	56.6	19.7	43.4
	366	–7.1	–15.6	26.8	59.0	19.7	43.4
	404	–7.4	–16.3	27.1	59.7	19.7	43.4
Headlamp levelling	323	0.8	1.76	—	—	0.8	1.76
	366	0.8	1.76	—	—	0.8	1.76
	404	0.8	1.76	—	—	0.8	1.76
Sliding side load door	323	6.3	13.9	7.9	17.4	14.2	31.3
(Vans)	366	7.2	15.8	7.0	15.4	14.2	31.3
Glazed rear doors	323	–2.2	–4.8	10.5	23.1	8.3	18.3
(Vans)	366	–3.2	–7.0	11.5	25.3	8.3	18.3
Translucent fibreglass roof	323	–3.2	–7.0	–13.1	–28.9	–16.3	–35.9
(Vans)	366	–3.5	–7.7	–19.1	–42.1	–22.6	–49.8
Full-width bulkhead	323	20.8	45.8	13.9	30.6	34.7	76.14
(Vans)	366	22.5	49.6	12.2	26.9	34.7	76.14
Wide rear step	323	–1.8	–3.9	8.9	19.6	7.1	15.6
(Vans)	366	–1.6	–3.5	8.7	19.1	7.1	15.6
Half-width bulkhead	323	–11.6	–25.5	–7.8	–17.2	–19.4	–42.7
deletion (vans)	366	–12.6	–27.7	–6.8	–15.0	–19.4	–42.7
Rear underride plus rear step	323	–6.2	–13.6	31.3	69.0	25.1	55.3
(Vans) (Service fitment)	366	–5.5	–12.1	30.6	67.4	25.1	55.3

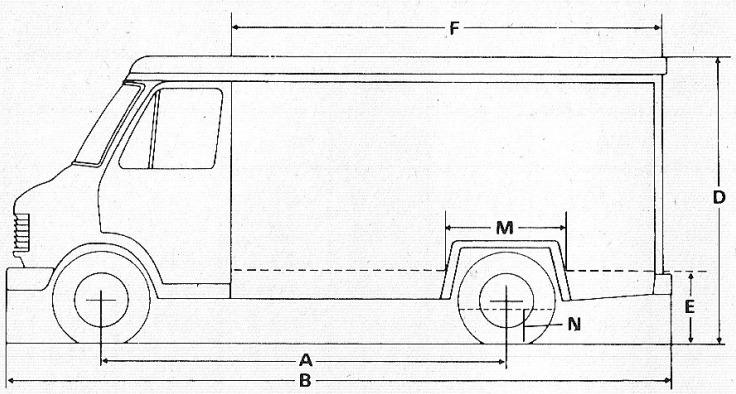

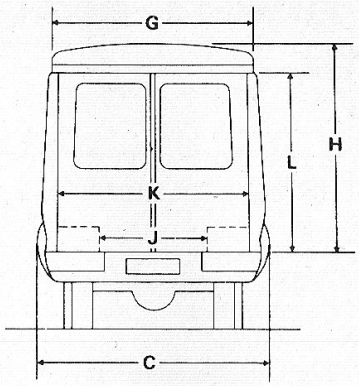

VANS

		mm	in	mm	in
A	Wheelbase	3226	127.0	3658	144.0
B	O/Length	4890	192.0	5880	231.0
C	O/Width	2046	80.56	2046	80.56
D	O/Height (unladen)	2637	103.8	2637	103.8
E	Load platform height (unladen)	803	31.68	808	31.83
F	Interior length without b/head	2870	113.0	3860	152.0
G	Interior length with b/head	2750	108.0	3740	147.0
H	Interior height	1870	73.0	1870	73.0
J	Load door aperture width (top)	1600	63.0	1600	63.0
K	Load door aperture width (bottom)	1650	65.0	1650	65.0
L	Load door aperture height	1580	62.0	1580	62.0
	Load volume without b/head	9.8m³	350 ft³	13.2 m³	465 ft³
	Load volume with b/head	9.4m³	335 ft³	12.8 m³	450 ft³

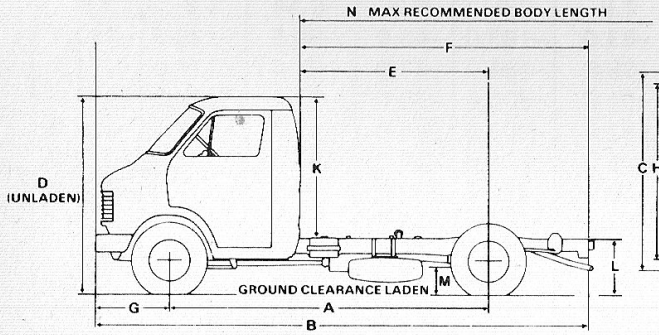

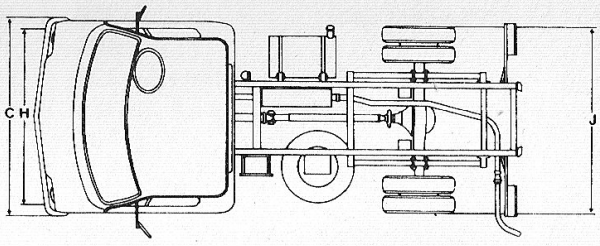

CHASSIS CABS

			mm	in	mm	in	mm	in
A	Wheelbase		3226	127.0	3658	144.0	4039	159.0
B	O/Length		5034.5	198.2	5796	228.18	6529	257.0
C	O/Width (at bumper)		2046.2	80.56	2046.2	80.56	2046.2	80.56
D	O/Height (unladen)		2152	84.73	2152	84.73	2152	84.73
E	Cab to rear axle		1904.7	74.98	2336.5	91.98	2717.2	106.97
F	Cab to end of frame		2920.7	114.98	3682.5	144.98	4413.2	173.74
G	Front overhang		740	29.12	740	29.12	740	29.12
H	Front track (1)		1685.5	66.36	1685.5	66.36	1685.5	66.36
J	Rear track (2)		1570	61.83	1570	61.83	1570	61.83
K	Frame to cab roof		1465.6	57.7	1465.6	57.7	1465.6	57.7
L	Frame height from ground (3)		682	26.86	682	26.86	682	26.86
M	Ground clearance (laden)	F/A	212	8.35	212	8.35	212	8.35
		R/A	182	7.16	182	7.16	182	7.16
N	Max rec body length		3000	118.0	3750	148.0	4500	177.0

(1) With tubed tyres—1699.7 mm (66.92 in) with tubless tyres.
(2) With tubed tyres—1575.6 mm (62.03 in) with tubeless tyres.
(3) Unladen.